Cat. No. W344-E1-19

SYSMAC

CX-Protocol Ver. 2.0

CXONE-AL□□D-V4

OPERATION MANUAL

OMRON

NOTE

All rights reserved. No part of this publication may be reproduced, stored in a retrieval system, or transmitted, in any form, or by any means, mechanical, electronic, photocopying, recording, or otherwise, without the prior written permission of OMRON.

No patent liability is assumed with respect to the use of the information contained herein. Moreover, because OMRON is constantly striving to improve its high-quality products, the information contained in this manual is subject to change without notice. Every precaution has been taken in the preparation of this manual. Nevertheless, OMRON assumes no responsibility for errors or omissions. Neither is any liability assumed for damages resulting from the use of the information contained in this publication.

Trademarks

• Microsoft, Windows, Windows Vista, and Microsoft Edge are either registered trademarks or trademarks of Microsoft Corporation in the United States and other countries.
• ODVA, CIP, CompoNet, DeviceNet, and EtherNet/IP are trademarks of ODVA.

Other company names and product names in this document are the trademarks or registered trademarks of their respective companies.

Copyrights

Microsoft product screen shots used with permission from Microsoft.

SYSMAC
CX-Protocol Ver. 2.0
CXONE-AL□□D-V4

Operation Manual

Revised October 2026

Notice:

OMRON products are manufactured for use according to proper procedures by a qualified operator and only for the purposes described in this manual.

The following conventions are used to indicate and classify precautions in this manual. Always heed the information provided with them. Failure to heed precautions can result in injury to people or damage to the product.

⚠ DANGER Indicates information that, if not heeded, is likely to result in loss of life or serious injury. Additionally, there may be severe property damage.

⚠ WARNING Indicates information that, if not heeded, could possibly result in loss of life or serious injury. Additionally, there may be severe property damage.

⚠ Caution Indicates information that, if not heeded, could result in relatively serious or minor injury, damage to the product, or faulty operation.

OMRON Product References

All OMRON products are capitalized in this manual. The word “Unit” is also capitalized when it refers to an OMRON product, regardless of whether or not it appears in the proper name of the product.

The abbreviation “Ch,” which appears in some displays and on some OMRON products, often means “word” and is abbreviated “Wd” in documentation in this sense.

The abbreviation “PLC” means Programmable Controller and the abbreviation “PC” means personal computer and are not used as abbreviations for anything else.

The abbreviation “PMSU” means Protocol Macro Support Unit and refers to the Communications Board for the C200HX/HG/HE, Serial Communications Board for the CS, and Serial Communications Units for the CS/CJ.

Visual Aids

The following headings appear in the left column of the manual to help you locate different types of information.

Note Indicates information of particular interest for efficient and convenient operation of the product.

1,2,3... 1. Indicates lists of one sort or another, such as procedures, checklists, etc.

TABLE OF CONTENTS

PRECAUTIONS xxiii

1 Intended Audience xxiv
2 General Precautions xxiv
3 Safety Precautions xxiv
4 Operating Environment Precautions xxiv
5 Application Precautions xxv
6 Software Operating Procedures xxvi

SECTION 1
Introduction 1

1-1 Overview of the CX-Protocol 2
1-2 Features 2
1-3 Supported PLC Models and Personal Computers 5
1-4 System Configuration 9
1-5 Protocol Macro 14
1-6 Protocol Macro Structure 17
1-7 Data Created by the CX-Protocol 20
1-8 Main Screens of the CX-Protocol 21
1-9 Overview of Project Creation 24
1-10 Incorporated Standard System Protocol 25
1-11 Basic Procedure of the Protocol Macro Usage 26
1-12 Specifications 33
1-13 Differences between Protocol Macros 37

SECTION 2
Installing/Uninstalling/Starting/Ending 41

2-1 Connecting to a PLC 42
2-2 Installing and Uninstalling the Software 45
2-3 Startup 45
2-4 Shutdown 46
2-5 Outline of User Interface 46

SECTION 3
Protocol Macro 57

3-1 Protocol Macro Outline 58
3-2 Sequence Attributes (Common to All Steps) 75
3-3 Step Attributes 84
3-4 Communication Message Attributes 95
3-5 Creating Matrices 112
3-6 Examples of Standard System Protocols 116
3-7 Example of Communications Sequence 118
3-8 Executing a Created Communications Sequence (CS/CJ) 121
3-9 Executing a Created Communications Sequence (C200HX/HG/HE) 128
3-10 Auxiliary Area and Allocated Data Areas 134

TABLE OF CONTENTS

SECTION 4
Using the Protocol Macro Function 151

4-1 Applicable Range of the Protocol Macro Function 152
4-2 Protocol Creation Process 154
4-3 Transmission Control Mode Setup 157
4-4 Ladder Programming Method 160
4-5 Calculation Method of Monitoring Time 171
4-6 Operation Confirmation 173
4-7 Errors at the Protocol Execution 175
4-8 Communications Response Time Performance 184
4-9 Cycle Time Performance 201

SECTION 5
Object Creation 203

5-1 Creating Projects and Protocols 204
5-2 Creating Sequences and Steps 208
5-3 Creating Messages and Matrices 209
5-4 System Protocol Display and Editing 211

SECTION 6
Project and Protocol Editing 213

6-1 Editing Projects 214
6-2 Editing Protocols 216

SECTION 7
Sequence Setting and Editing 219

7-1 Setting Sequences 220
7-2 Editing Sequences 226

SECTION 8
Step Setting and Editing 229

8-1 Step Setting 230
8-2 Step Editing 236

SECTION 9
Setting and Editing Messages and Matrix Lists 239

9-1 Creating Messages 240
9-2 Matrix Creation 254
9-3 Message and Matrix Editing 255

SECTION 10
Communications PLC Setup and Online Connections . 259

10-1 PLC System Configuration 260
10-2 Communications Settings between Personal Computer and PLC 261
10-3 Online Connections and Mode Changes 268
10-4 Modem Connections 270
10-5 I/O Table Creation 279
10-6 PMSU Communications Port Settings 280
10-7 Transfer of Communications Port Setting Data to PLC 282

TABLE OF CONTENTS

SECTION 11
Protocol Data Transferring and Printing 285

11-1 Transferring and Reading Protocol Data between the Computer and PMSU 286
11-2 Printing Protocols 291
11-3 Importing Protocol Data from PST/PSS Files 293
11-4 CS/CJ Protocol and C200HX/HG/HE Protocol 295

SECTION 12
Tracing and Monitoring 297

12-1 Tracing Transmission Lines 298
12-2 Outline of PLC Memory Window 302
12-3 I/O Memory Display and Editing 309
12-4 I/O Memory Monitor 312
12-5 I/O Memory Transfer and Comparison 317

SECTION 13
Error and Error Log Display 321

SECTION 14
Troubleshooting 329

SECTION 15
Help 337

Appendices

A Creating the Protocol Applications 339
B PLC Setup and PMSU Settings 353
C Wiring RS-232C Cable Connectors 359

Revision History 363

TABLE OF CONTENTS

About this Manual:

The CX-Protocol is Support Software for the protocol macro functionality. This manual describes the installation and operation of the CX-Protocol and includes the sections described below.

This manual is intended for the following personnel:

Personnel in charge of installing FA devices
Personnel designing FA systems
Personnel managing FA facilities

Name	Cat. No.	Contents
CXONE-AL□□D-V4 CX-Protocol Operation Manual	W344 (this manual)	Describes the use of the CX-Protocol to create protocol macros as communications sequences to communicate with external devices. (This manual)
CXONE-AL□□D-V4/LT□□□-V4 CX-One Setup Manual	W463	Installation and overview of CX-One FA Integrated Tool Package.
Sysmac Studio Version 1 Operation Manual	W504	Describes the procedures and operations of the Sysmac Studio, including operations for functions, function blocks, and structured text programming.
SYSMAC CS/CJ Series CS1W-SCB□1-V1, CS1W-SCU□1-V1 CJ1W-SCU□1-V1, CJ1W-SCU□2 Serial Communications Boards and Serial Communications Unit Operation Manual	W336	Describes the use of Serial Communications Unit and Boards to perform serial communications with external devices, including the usage of standard system protocols for OMRON products.
SYSMAC CS/CJ/CP/NSJ Series CS1G/H-CPU□□H CS1G/H-CPU□□-EV1 CS1D-CPU□□HA CS1D-CPU□□SA CS1D-CPU□□P CS1D-CPU□□H CS1D-CPU□□S CS1W-SCU□□-V1 CS1W-SCB□□-V1 CJ2H-CPU6□-EIP CJ2H-CPU6□ CJ2M-CPU1□ CJ2M-CPU3□ CJ3M-CPU1□ CJ3M-CPU3□ CJ1H-CPU□□H-R CJ1G/H-CPU□□H CJ1G-CPU□□P CJ1G-CPU□□ CJ1M-CPU□□ CJ1W-SCU□□-V1 CP1L-M/L□□□-□ CP1H-X□□□□-□ CP1H-XA□□□□-□ CP1H-Y□□□□-□ CP1E-E□□D□-□ CP1E-N□□D□-□ NSJ□-□□□□(B)-G5D NSJ□-□□□□(B)-M3D Communications Commands Reference Manual	W342	Describes the C-series (Host Link) and FINS communications commands used with CS/CJ/CP-series PLCs and NSJ-series Controllers.
SYSMAC CJ Series CJ2H-CPU6□-EIP CJ2H-CPU6□ CJ2M-CPU1□ CJ2M-CPU3□ Programmable Controllers Hardware User's Manual	W472	Provides an outline of and describes the design, installation, maintenance, and other basic operations for the CJ-series CJ2 CPU Units. The following information is included: Overview and features System configuration Installation and wiring Troubleshooting Use this manual together with the W473.
SYSMAC CJ Series CJ2H-CPU6□-EIP CJ2H-CPU6□ CJ2M-CPU1□ CJ2M-CPU3□ Programmable Controllers Software User's Manual	W473	Describes programming and other methods to use the functions of the CJ2 CPU Units. The following information is included: CPU Unit operation Internal memory areas Programming Tasks CPU Unit built-in functions Use this manual together with the W472.

SYSMAC CS Series CS1G/H-CPU□□H Programmable Controllers Operation Manual	W339	Describes the installation and operation of the CS-series PLCs.
SYSMAC CJ Series CJ1H-CPU□□H-R, CJ1G/H-CPU□□H, CJ1G-CPU□□P, CJ1G-CPU□□, CJ1M-CPU□□ Programmable Controllers Operation Manual	W393	Describes the installation and operation of the CJ-series PLCs.
SYSMAC CS/CJ/NSJ Series CS1G/H-CPU□□H, CS1G/H-CPU□□-EV1, CS1D-CPU□□HA, CS1D-CPU□□SA, CS1D-CPU□□P, CS1D-CPU□□H, CS1D-CPU□□S, CJ1H-CPU□□H-R, CJ1G/H-CPU□□H, CJ1G-CPU□□P, CJ1G-CPU□□, CJ1M-CPU□□, NSJ□-□□□□(B)-G5D NSJ□-□□□□(B)-M3D Programmable Controllers Programming Manual	W394	Describes programming and other methods to use the functions of the CS/CJ/NSJ-series PLCs. The following information is included: • Programming • Tasks • File memory • Other functions Use this manual in combination with the SYSMAC CS Series Operation Manual (W339) or SYSMAC CJ Series Operation Manual (W393).
SYSMAC CS/CJ Series CS1G/H-CPU□□-EV1, CS1G/H-CPU□□H, CS1D-CPU□□HA, CS1D-CPU□□SA, CS1D-CPU□□P, CS1D-CPU□□H, CS1D-CPU□□S, CJ2H-CPU6□-EIP, CJ2H-CPU6□, CJ2M-CPU1□, CJ2M-CPU3□ CJ3M-CPU1□ CJ3M-CPU3□ CJ1H-CPU□□H-R CJ1G-CPU□□, CJ1G/H-CPU□□H, CJ1G-CPU□□P, CJ1M-CPU□□ SYSMAC One NSJ Series NSJ□-□□□□(B)-G5D NSJ□-□□□□(B)-M3D Programmable Controllers Instructions Reference Manual	W474	Describes the ladder diagram programming instructions supported by CS/CJ-series or NSJ-series PLCs. When programming, use this manual together with the *Operation Manual or Hardware User's Manual* (CS1: W339, CJ1: W393,or CJ2:W472) and *Programming Manual or Software User's Manual* (CS1/CJ1:W394 or CJ2:W473).
SYSMAC CP Series CP1H-X□□□□-□ CP1H-XA□□□□-□ CP1H-Y□□□□-□ CP1H CPU Unit Operation Manual	W450	Provides the following information on the CP Series: • Overview/Features • System configuration • Mounting and wiring • I/O memory allocation • Troubleshooting Use this manual together with the *CP1H Programmable Controllers Programming Manual* (W451).
NSJ Series NSJ5-TQ□□(B)-G5D, NSJ5-SQ□□(B)-G5D, NSJ8-TV□□(B)-G5D, NSJ10-TV□□(B)-G5D, NSJ12-TS□□(B)-G5D, NSJ5-TQ□□(B)-M3D, NSJ5-SQ□□(B)-M3D, NSJ8-TV□□(B)-M3D, NSJW-ETN21, NSJW-CLK21-V1, NSJW-IC101 Operation Manual	W452	Provides the following information about the NSJ-series NSJ Controllers: Overview and features Designing the system configuration Installation and wiring I/O memory allocations Troubleshooting and maintenance Use this manual in combination with the following manuals: SYSMAC CS Series Operation Manual (W339), SYSMAC CJ Series Operation Manual (W393), SYSMAC CS/CJ Series Programming Manual (W394), and NS-V1/-V2 Series Setup Manual (V083)
SYSMAC CP Series CP1H-X40D□-□ CP1H-XA40D□-□ CP1H-Y20DT-D CP1L-L14D□-□ CP1L-L20D□-□ CP1L-M30D□-□ CP1L-M40D□-□ CP1H and CP1L CPU Unit Programming Manual	W451	Provides the following information on the CP Series: • Programming instructions • Programming methods • Tasks • File memory • Functions Use this manual together with the *CP Series CP1H CPU Units Operation Manual* (W450) and *CP Series CP1L CPU Units Operation Manual* (W462)
CXONE-AL□□D-V4 CX-Programmer Operation Manual	W446	Provides information on how to use the CX-Programmer, a programming device that supports the CS/CJ-series PLCs, and the CX-Net contained within CX-Programmer.

SYSMAC CS/CJ Series CQM1H-PRO-E1 C200H-PRO27-E, CQM1-PRO01-E Programming Consoles Operation Manual	W341	Provides information on how to program and operate CS/CJ-series PLCs using a Programming Console.

⚠ **WARNING** Failure to read and understand the information provided in this manual may result in personal injury or death, damage to the product, or product failure. Please read each section in its entirety and be sure you understand the information provided in the section and related sections before attempting any of the procedures or operations given.

Please read this manual carefully and be sure you understand the information provided before attempting to install and/or operate the CX-Protocol. **Be sure to read the precautions provided in the following section.**

Section 1 Introduction outlines the Protocol Macro function and the CX-Protocol.

Section 2 Environment/Installing/Uninstalling/Starting/Editing outlines the functions of CX-Protocol and describes the operating environment, installation procedure, and the setting of the usage environment.

Section 3 Protocol Macro describes details of the protocol macro functions.

Section 4 Using the Protocol Macro Function describes various precautions in using the protocol macro function.

Section 5 Object Creation describes how to create objects, such as projects, protocols, sequences, steps, messages, and matrices.

Section 6 Project and Protocol Editing describes details of the editing of projects and protocols.

Section 7 Sequence Setting and Editing describes details of the setting and editing of sequences.

Section 8 Step Setting and Editing describes details of the setting and editing of steps.

Section 9 Setting and Editing Messages and Matrix Lists describes details of the setting and editing of messages and matrix lists.

Section 10 Communications PLC Setup and Online Connections describes details of the communications settings and online connections.

Section 11 Protocol Data Transferring and Printing describes details of the transferring, converting, and printing of protocol data.

Section 12 Tracing and Monitoring describes details of PLC memory area monitoring and the transmission line tracing.

Section 13 Error and Error Log Display describes details of the displaying of errors and the error log.

Section 14 Troubleshooting lists the error messages and describes their causes and remedies.

Section 15 Help describes the online help services.

Appendix A Creating the Protocol Applications shows some examples of data transmission between personal computers using the protocol macro function.

Appendix B PLC Setup and PMSU Settings provides the settings for the PLC Setup and PMSU.

Appendix C Wiring RS-232C Cable Connectors describes how to wire RS-232C connectors.

The CS Series, CJ Series, NSJ Series, and CP Series are subdivided as shown below.

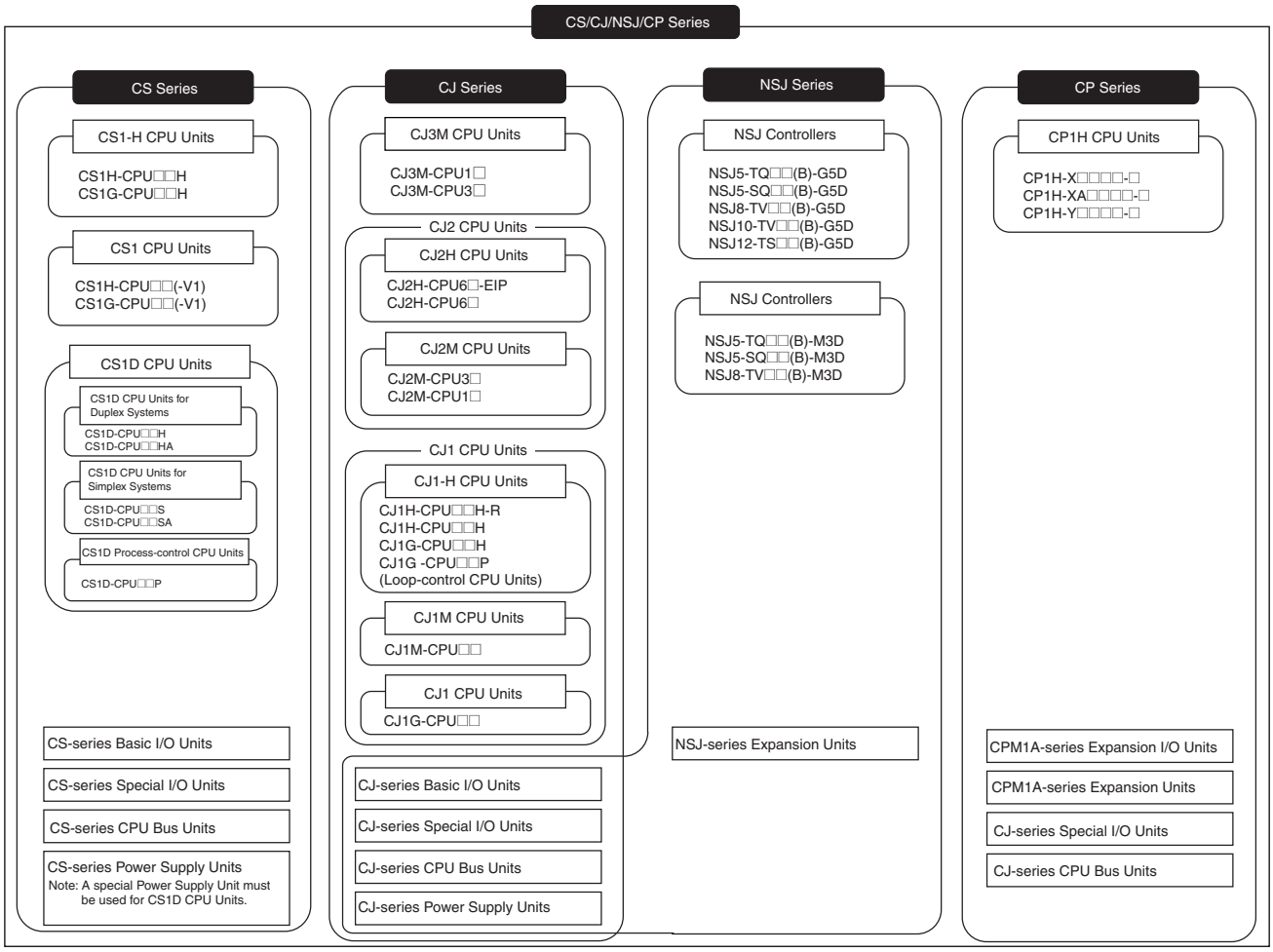

Terms and Conditions Agreement

WARRANTY

- The warranty period for the Software is one year from the date of purchase, unless otherwise specifically agreed.
- If the User discovers defect of the Software (substantial non-conformity with the manual), and return it to OMRON within the above warranty period, OMRON will replace the Software without charge by offering media or download from OMRON's website. And if the User discovers defect of media which is attributable to OMRON and return it to OMRON within the above warranty period, OMRON will replace defective media without charge. If OMRON is unable to replace defective media or correct the Software, the liability of OMRON and the User's remedy shall be limited to the refund of the license fee paid to OMRON for the Software.

LIMITATION OF LIABILITY

- THE ABOVE WARRANTY SHALL CONSTITUTE THE USER'S SOLE AND EXCLUSIVE REMEDIES AGAINST OMRON AND THERE ARE NO OTHER WARRANTIES, EXPRESSED OR IMPLIED, INCLUDING BUT NOT LIMITED TO, WARRANTY OF MERCHANTABILITY OR FITNESS FOR PARTICULAR PURPOSE. IN NO EVENT, OMRON WILL BE LIABLE FOR ANY LOST PROFITS OR OTHER INDIRECT, INCIDENTAL, SPECIAL OR CONSEQUENTIAL DAMAGES ARISING OUT OF USE OF THE SOFTWARE.
- OMRON SHALL HAVE NO LIABILITY FOR DEFECT OF THE SOFTWARE BASED ON MODIFICATION OR ALTERNATION TO THE SOFTWARE BY THE USER OR ANY THIRD PARTY. OMRON SHALL NOT BE RESPONSIBLE AND/OR LIABLE FOR ANY LOSS, DAMAGE, OR EXPENSES DIRECTLY OR INDIRECTLY RESULTING FROM THE INFECTION OF OMRON PRODUCTS, ANY SOFTWARE INSTALLED THEREON OR ANY COMPUTER EQUIPMENT, COMPUTER PROGRAMS, NETWORKS, DATABASES OR OTHER PROPRIETARY MATERIAL CONNECTED THERETO BY DISTRIBUTED DENIAL OF SERVICE ATTACK, COMPUTER VIRUSES, OTHER TECHNOLOGICALLY HARMFUL MATERIAL AND/OR UNAUTHORIZED ACCESS.
- OMRON SHALL HAVE NO LIABILITY FOR SOFTWARE DEVELOPED BY THE USER OR ANY THIRD PARTY BASED ON THE SOFTWARE OR ANY CONSEQUENCE THEREOF.

APPLICABLE CONDITIONS

USER SHALL NOT USE THE SOFTWARE FOR THE PURPOSE THAT IS NOT PROVIDED IN THE ATTACHED USER MANUAL.

CHANGE IN SPECIFICATION

The software specifications and accessories may be changed at any time based on improvements and other reasons.

ERRORS AND OMISSIONS

The information in this manual has been carefully checked and is believed to be accurate; however, no responsibility is assumed for clerical, typographical, or proofreading errors, or omissions.

Version Upgrades

Improvements from Version 2.00 to 2.04

The following functionality has been added in upgrading the CX-Protocol from version 2.00 to 2.04.

New PLCs Supported

The following CS1D CPU Units are now supported.

Series	Model
CJ3M Series	CJ3M-CPU11/12/13/14/15/31/32/33/34/35

Improvements from Version 1.991 to Version 2.00

The following functionality has been added in upgrading the CX-Protocol from version 1.991 to 2.00.

New PLCs Supported

The following CS1D CPU Units are now supported.

Series	Model
CS1D Series	CS1D-CPU68HA/67HA/67SA/44SA

Improvements from Version 1.99 to 1.991

The following functionality has been added in upgrading the CX-Protocol from version 1.99 to 1.991.

Support for Microsoft Windows 10

Improvements from Version 1.97 to 1.99

The following functionality has been improved in upgrading the CX-Protocol from version 1.97 to 1.99.

New CPU Units Supported

The following NJ-series CPU Units are now supported.

Series	Model
NJ Series	NJ101-9000/9020/1000/1020

Improvements from Version 1.96 to 1.97

The following functionality has been added in upgrading the CX-Protocol from version 1.96 to 1.97.

Support for Microsoft Windows 8 and 8.1

Improvements from Version 1.95 to 1.96

The following functionality has been added in upgrading the CX-Protocol from version 1.95 to 1.96.

New CPU Units Supported

The following NJ-series CPU Units are now supported.

Series	Model
NJ Series	NJ501-4300/4400/4500

Supported the models CJ1W-SCU22, -SCU32 and -SCU42 Unit Ver.2.1.

Improvements from Version 1.94 to Version 1.95

The following functionality has been added in upgrading the CX-Protocol from version 1.94 to 1.95.

New CPU Units Supported

The following NJ-series CPU Units are now supported.

Series	Model
NJ-series CPU Unit models	NJ301-1100/1200

Improvements from Version 1.93 to Version 1.94

The following functionality has been added in upgrading the CX-Protocol from version 1.93 to 1.94.

Support for Sysmac Studio Trial Version

Improvements from Version 1.92 to Version 1.93

The following functionality has been added in upgrading the CX-Protocol from version 1.92 to 1.93.

New CPU Units Supported

The following NJ-series CPU Units are now supported.

Series	Model
NJ Series	NJ501-1300/1400/1500

Improvements from Version 1.91 to Version 1.92

The following functionality has been added in upgrading the CX-Protocol from version 1.91 to 1.92.

New PLCs Supported

The following CJ2 CPU Units are now supported.

Series	Model
CJ Series	CJ2M-CPU11/12/13/14/15/31/32/33/34/35

Improvements from Version 1.9 to Version 1.91

The following functionality has been added in upgrading the CX-Protocol from version 1.9 to 1.91.

Support for Microsoft Windows 7

Note This upgrade accompanies the upgrade of CX-One version 3.2 to CX-One version 4.03.

Improvements from Version 1.81 to Version 1.9

The following functionality has been added in upgrading the CX-Protocol from version 1.81 to 1.9.

New Units Supported

The following Units are now supported.

Series	Unit	Model
CJ Series	Serial Communications Unit	CJ1W-SCU22 CJ1W-SCU32 CJ1W-SCU42

Upgraded Functions

The EM Area banks that can be directly specified have been expanded from 0 to C hex to 0 to 18 hex.

⚠ **Caution** If you attempt to access EM banks 0D to 18 hex from any Unit other than the CJ1W-SCU22/32/42, a data read/write area exceeded error will occur in the protocol status. (This will occur even if EM banks 0D to 18 hex are supported by the CPU Unit.)

Improvements from Version 1.8 to Version 1.81

The following functionality has been added in upgrading the CX-Protocol from version 1.8 to 1.81.

New Units Supported

The following CPU Units are now supported.

Series	Models
CJ Series	CJ2H-CPU68/67/66/65/64

Improvements from Version 1.71 to Version 1.8

The following functionality has been added in upgrading the CX-Protocol from version 1.71 to 1.8.

New Units Supported

The following CPU Units are now supported.

Series	Models
CJ Series	CJ2H-CPU68-EIP/67-EIP/66-EIP/65-EIP/64-EIP

Improvements from Version 1.70 to Version 1.71

The following functionality has been added in upgrading the CX-Protocol from version 1.70 to 1.71.

New Units Supported

The following CPU Units are now supported.

Series	Models
CJ Series	CJ1H-CPU67H-R/66H-R/65H-R/64H-R

Windows Vista Supported

Improvements from Version 1.6 to Version 1.7

The following functionality has been added in upgrading the CX-Protocol from version 1.6 to 1.7.

New Units Supported

The following Serial Communications Units are now supported.

Series	Unit	Model
CS Series	Serial Communications Unit	CS1W-SCU31-V1
CJ Series	Serial Communications Unit	CJ1W-SCU31-V1

The following PLCs are now supported.

Series	CPU Units	Models
CP Series	CP1H-series CPU Units	CP1H-XA, CP1H-X, and CP1H-Y
NSJ Series	NSJ Controller	NSJ□-□□□□(B)-G5D NSJ□-□□□□(B)-M3D

Protocol Comparisons

- The CX-Protocol can now be used to compare the protocols in the project with those in the PLC.

Improvements from Version 1.5 to Version 1.6

Installing the CX-Protocol from the CX-One FA Integrated Tool Package

Ver. 1.5	Ver. 1.6
The CX-Protocol could be installed only independently.	The CX-Protocol can be installed as one of the functions of the CX-One Integrated Tool Package.

CX-Programmer Startup Method

Ver. 1.5	Ver. 1.6
The CX-Protocol could be started only from the Windows Start Menu.	The CX-Protocol can also be started by right-clicking one of the following Serial Communications Boards/Units in the I/O Table Window opened from the CX-Programmer that was installed from the CX-One and selecting *Start Special Application* from the pop-up menu. • CS1W-SCU□□-V1 • CS1W-SCB□□-V1 • CJ1W-SCU□□-V1 **Note** When the *Start with Settings Inherited* Option is selected, a new project will be created and the device type setting will be automatically performed.

Version 1.5 Upgrade Information

The changes that have been made from version 1.4 to version 1.5 of the CX-Protocol to support the upgraded functionality of CS/CJ-series Serial Communications Boards/Units with unit version 1.2 are explained here.

Version 1.5 Improved Functionality from Version 1.4

Compatible PLCs

Serial Communications Board/Unit Version Upgrade Compatibility

CX-Protocol version 1.5 supports the following CS/CJ-series Serial Communications Boards/Units with unit version 1.2.

Series	Unit	Model
CS Series	Serial Communications Board	CS1W-SCB21-V1, CS1W-SCB41-V1
	Serial Communications Unit	CS1W-SCU21-V1
CJ Series	Serial Communications Unit	CJ1W-SCU21-V1, CS1W-SCU41-V1

CX-Protocol version 1.5 supports the following new CPU Units.

Series	CPU Unit model
CJ Series	CJ1H-CPU67H

Communications Port Settings for Serial Communications Boards/Units

The communications port settings for CS/CJ-series Serial Communications Boards/Units with unit version 1.2 can be set using CX-Protocol version 1.5 in the Communications Port Settings for Boards/Units. The following Communications Port Settings Dialog Box will be displayed.

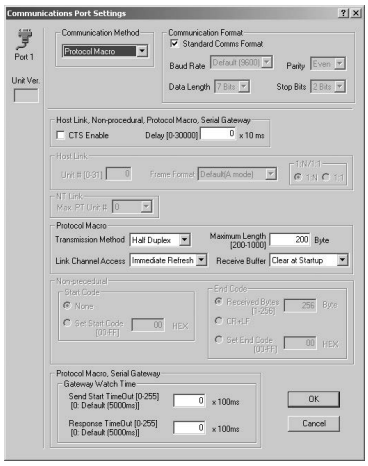

For details on each of the settings, refer to the *CS/CJ Series Serial Communications Boards and Serial Communications Units Operation Manual* (W336-E1-06 or later).

CX-Protocol version 1.4 or earlier cannot read the CX-Protocol version 1.5 project files (.psw) that contain the communications port settings for the upgrade functions, such as no-protocol and Serial Gateway, in the Serial Communications Boards/Units with unit version 1.2. If an attempt to read these files is made, the message “Unexpected file format.” will be displayed.

Standard System Protocol Additions

CX-Protocol version 1.5 includes the following additional standard system protocols that have been added to Serial Communications Boards/Units with unit version 1.2.

- Host Link C-mode Command Master (Sequence numbers 700 to 721)
- Host Link FINS Command Master (Sequence numbers 750 to 767)
- Mitsubishi Computer Link Master (A-compatible, 1C frame, model 1) (Sequence numbers 802 to 817)
- Additional communications sequences for CompoWay/F Master (added Sequence numbers 606 to 621)

Operation Manual

The *CX-Protocol Ver. 1.4 Operation Manual* (W344) is included with CX-Protocol version 1.5. Apart from the new functions and improvements in version 1.5 explained here, however, there are no other changes in the upgrade that will affect operation or functionality.

Version 1.4

The following functions have been added to the CX-Protocol with the upgrade from Ver. 1.3 to Ver. 1.4.

New PLCs Supported

Simulation is newly supported for the following PLCs.

Series	CPU Unit model numbers
CS	CS1D-CPU67H/65H CS1D-CPU67S/65S/44S/42S
CJ	CJ1M-CPU11/21

Version 1.3

The following functions have been added to the CX-Protocol with the upgrade from Ver. 1.2 to Ver. 1.3.

CJ1M-CPU23/22/13/12 CPU Units Supported

Windows XP Supported

Version 1.2

The following functions have been added to the CX-Protocol with the upgrade from Ver. 1.1 to Ver. 1.2.

CS1-H, CJ1, and CJ1-H CPU Units Supported

PRECAUTIONS

This section provides general precautions for using the CX-Protocol and related devices.

The information contained in this section is important for the safe and reliable application of the CX-Protocol. You must read this section and understand the information contained before attempting to set up or operate the CX-Protocol.

1 Intended Audience xxiv
2 General Precautions xxiv
3 Safety Precautions xxiv
4 Operating Environment Precautions xxiv
5 Application Precautions xxv
6 Software Operating Procedures. xxvi

1 Intended Audience

This manual is intended for the following personnel, who must also have knowledge of electrical systems (an electrical engineer or the equivalent).

- Personnel in charge of installing FA systems.
- Personnel in charge of designing FA systems.
- Personnel in charge of managing FA systems and facilities.

2 General Precautions

The user must operate the product according to the performance specifications described in the operation manuals.

Before using the product under conditions which are not described in the manual or applying the product to nuclear control systems, railroad systems, aviation systems, vehicles, combustion systems, medical equipment, amusement machines, safety equipment, and other systems, machines, and equipment that may have a serious influence on lives and property if used improperly, consult your OMRON representative.

Make sure that the ratings and performance characteristics of the product are sufficient for the systems, machines, and equipment, and be sure to provide the systems, machines, and equipment with double safety mechanisms.

This manual provides information for programming and operating OMRON PLCs. Be sure to read this manual before attempting to use the software and keep this manual close at hand for reference during operation.

⚠ **WARNING** It is extremely important that a PLC and all PLC Units be used for the specified purpose and under the specified conditions, especially in applications that can directly or indirectly affect human life. You must consult with your OMRON representative before applying a PLC System to the above mentioned applications.

3 Safety Precautions

⚠ **WARNING** Never attempt to disassemble any Units while power is being supplied. Doing so may result in serious electrical shock or electrocution.

⚠ **WARNING** Never touch any of the terminals while power is being supplied. Doing so may result in serious electrical shock or electrocution.

4 Operating Environment Precautions

Do not operate the control system in the following places.

- Where the PLC is exposed to direct sunlight.
- Where the ambient temperature is below 0°C or over 55°C.
- Where the PLC may be affected by condensation due to radical temperature changes.
- Where the ambient humidity is below 10% or over 90%.
- Where there is any corrosive or inflammable gas.
- Where there is excessive dust, saline air, or metal powder.
- Where the PLC is affected by vibration or shock.
- Where water, oil, or chemical may splash onto the PLC.

⚠ **Caution** The operating environment of the PLC system can have a large effect on the longevity and reliability of the system. Improper operating environments can lead to malfunction, failure, and other unforeseeable problems with the PLC system. Be sure that the operating environment is within the specified conditions at installation and remains within the specified conditions during the life of the system.

5 Application Precautions

Observe the following precautions when using the PLC.

⚠ **WARNING** Failure to abide by the following precautions could lead to serious or possibly fatal injury. Always heed these precautions.

- Always ground the system to 100 Ω or less when installing the system to protect against electrical shock.
- Always turn OFF the power supply to the PLC before attempting any of the following. Performing any of the following with the power supply turned ON may lead to electrical shock:
  - Mounting or removing any Units (e.g., I/O Units, CPU Unit, etc.) or memory cassettes.
  - Assembling any devices or racks.
  - Connecting or disconnecting any cables or wiring.

⚠ **Caution** Failure to abide by the following precautions could lead to faulty operation of the PLC or system or could damage the PLC or PLC Units. Always heed these precautions.

- Use the Units only with the power supplies and voltages specified in the operation manuals. Other power supplies and voltages may damage the Units.
- Take measures to stabilize the power supply to conform to the rated supply if it is not stable.
- Provide circuit breakers and other safety measures to provide protection against shorts in external wiring.
- Do not apply voltages exceeding the rated input voltage to Input Units. The Input Units may be destroyed.
- Do not apply voltages exceeding the maximum switching capacity to Output Units. The Output Units may be destroyed.
- Always disconnect the LG terminal when performing withstand voltage tests.
- Install all Units according to instructions in the operation manuals. Improper installation may cause faulty operation.
- Provide proper shielding when installing in the following locations:
  - Locations subject to static electricity or other sources of noise.
  - Locations subject to strong electromagnetic fields.
  - Locations subject to possible exposure to radiation.
  - Locations near to power supply lines.
- Be sure to tighten Backplane screws, terminal screws, and cable connector screws securely.

- Do not attempt to take any Units apart, to repair any Units, or to modify any Units in any way.

⚠ **Caution** The following precautions are necessary to ensure the general safety of the system. Always heed these precautions.

- Provide double safety mechanisms to handle incorrect signals that can be generated by broken signal lines or momentary power interruptions.
- Provide external interlock circuits, limit circuits, and other safety circuits in addition to any provided within the PLC to ensure safety.

6 Software Operating Procedures

Observe the following precautions when using the CX-Protocol.

⚠ **WARNING** Confirm safety before transferring the I/O memory area state to the CIO area of the PLC using the PLC memory window function of the CX-Protocol. Not doing so may cause malfunction in devices connected to the I/O Units regardless of the operating mode of the CPU Unit.

⚠ **Caution** Confirm safety at the destination node before transferring a protocol to another node or editing the I/O area. Doing either of these without confirming safety may result in injury.

⚠ **Caution** Confirm that no adverse effect will occur in the system before changing the present value of any word in memory. Not doing so may result in an unexpected operation.

⚠ **Caution** Confirm that no adverse effect will occur in the system before changing the operating mode of the CPU Unit. Not doing so may result in an unexpected operation.

⚠ **Caution** Confirm that no adverse effect will occur in the system before force-setting/force-resetting any bit in memory. Not doing so may result in an unexpected operation.

⚠ **Caution** Confirm that no adverse effect will occur in the system before transferring the communications port A/B settings to the Protocol Macro Support Unit (PMSU). Not doing so may result in an unexpected operation.

⚠ **Caution** Check the user protocol for proper execution before actually running it on the Unit. Not checking the protocol may result in an unexpected operation.

⚠ **Caution** Online connection of the CX-Protocol cannot be made to a PLC which is connected online to SYSMAC-CPT or SYSMAC-PST. Therefore, when SYSMAC-CPT or SYSMAC-PST is running and connected online to a PLC, it must be offline before making online connection to the CX-Protocol. Similarly, when the CX-Protocol is connected online to a PLC, it must be switched to offline before making online connection to SYSMAC-CPT or SYSMAC-PST.

SECTION 1
Introduction

This section outlines the Protocol Macro function and the CX-Protocol.

1-1 Overview of the CX-Protocol 2
1-2 Features 2
1-2-1 Features of the Protocol Macro Function 2
1-2-2 Features of the CX-Protocol 4
1-3 Supported PLC Models and Personal Computers 5
1-3-1 Supported PLC Models. 5
1-3-2 Supported PMSUs 5
1-3-3 Supported Personal Computers. 9
1-4 System Configuration 9
1-4-1 Connecting the CX-Protocol and the PLC 9
1-4-2 Connecting the PLC to External Devices 11
1-5 Protocol Macro 14
1-5-1 Protocol Macro Outline 14
1-5-2 Standard System Protocol. 17
1-6 Protocol Macro Structure 17
1-6-1 Step Structure 19
1-7 Data Created by the CX-Protocol 20
1-8 Main Screens of the CX-Protocol 21
1-9 Overview of Project Creation 24
1-10 Incorporated Standard System Protocol 25
1-11 Basic Procedure of the Protocol Macro Usage 26
1-11-1 For the CS/CJ 26
1-11-2 For the C200HX/HG/HE 29
1-12 Specifications 33
1-12-1 Protocol Macro Specifications 33
1-12-2 Specifications of the CX-Protocol 37
1-13 Differences between Protocol Macros 37

1-1 Overview of the CX-Protocol

The CX-Protocol is the software for creating a procedure (or protocol) for sending or receiving data to or from general-purpose external devices connected to a Protocol Macro Support Unit (PMSU) through RS-232C or RS-485A/422.

A protocol consists of a set of communications sequences. CX-Protocol transfers a protocol to the PMSU, specifies the sequence number of the protocol using the PMCR instruction on the CPU Unit, and executes the communications sequence.

The communications sequence consists of several steps and allows the user to iterate, branch, or end these steps according to the result of the process.

Note

1. In the following section, the Communications Board for the C200HX/HG/HE, Serial Communications Board for the CS and CQM1H, and Serial Communications Units for the CS/CJ are referred to as the "PMSU."
2. The CJ-series protocol macro function of the CJ-series Serial Communications Unit is used even for the system configuration described below, which uses a CP-series CPU Unit with a CJ-series Serial Communications Unit. The CJ Series is thus specified in descriptions unless there is information unique to the CP Series.

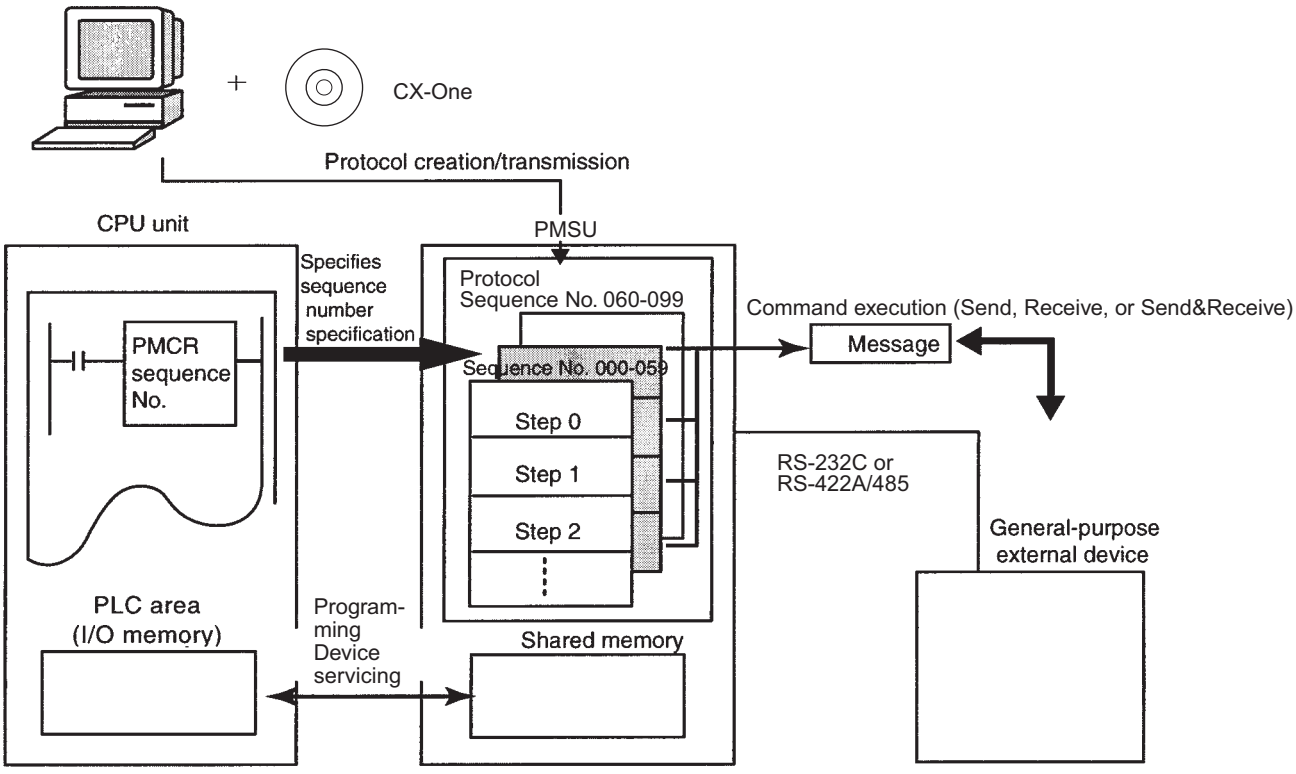

1-2 Features

1-2-1 Features of the Protocol Macro Function

Support for a wide range of communications protocols

Supports communications with almost all external general-purpose devices that have RS-232C or RS-422A/485 ports and support half-duplex or full-duplex mode (full-duplex is for CS/CJ only) and start-stop synchronization

mode (refer to *4-1 Applicable Range of the Protocol Macro Function* for restrictions).

Creation of send frames and receive (expected) frames according to the desired communications frame specifications

Enables creation of almost all send frames (frames composed of commands, data, and so on) and receive (expected) frames (frames composed of responses and so on) according to the communications frame (message) specifications of external devices.

Support for operation functions relating to communications

Supports error check code calculation, frame length calculation during transmission process, and numeral data conversion between ASCII and hexadecimal.

Support for the send and receive time monitoring function

Supports the receive wait monitoring, receive finish monitoring, and send finish monitoring functions. This function lets you designate whether to finish send/receive process or to start retry process when those monitoring times are exceeded.

Support for retry process

Lets you designate, only by designating the number of retries, whether to automatically execute send/receive retries when an error occurs.

Integration of variables for read/write process with PLC into send frames and receive (expected) frames

Enables integration of variables for read process from PLC's I/O memory into send frames (messages) themselves. Data in the PLC that has been read during transmission process can be used for addresses (destinations) or data. This function also enables integration of variables for write process to PLC's I/O memory into receive frames (messages) themselves. Addresses (destinations) or data can be written into the PLC during the receive process.

Easy realization of rich functions including 1:N communications and switching data write destinations, using repetition variables

Lets you designate repeat variables for send/receive process (repeat counter) in variables. With this function, a wide variety of process can be easily realized: for example, sending the same data to multiple addresses (destinations) by switching them during 1:N communications; switching write destination addresses in PLC's I/O memory during data receive process.

Execute interrupt program on the PLC while receiving data

Enables interrupt program execution on the PLC (CPU Unit) while receiving data. The interrupt function is supported only by the Communications Board for the C200HX/HG/HE and Serial Communications Board for the CS. It cannot be used with the Serial Communications Unit for the CS/CJ.

Switch the next process depending on the received data

The next process can be switched according to the data comparison with the data registered to the maximum of 15 types.

The following functions have been added to the protocol macro for the CS/CJ.

Error check code (only for the CS/CJ protocol macro)

LRC2 (2's complement of LRC) and SUM1 (1's complement of SUM) have been added to the error check codes.

Wait command to keep the next process on standby until a synchronous signal is input from the PLC (only for the CS/CJ protocol macro)

During the send/receive sequence step, the next process can be kept on standby until a synchronous signal is input from the PLC (CPU Unit). This enables computation processing such as data processing on the CPU Unit during the send/receive sequence.

Supports half-duplex and full-duplex transmission mode (only for the CS/CJ protocol macro)

The conventional protocol macro provides only the half-duplex macro. With the half-duplex macro, the receive buffer is cleared right after the send operation, thus the received data cannot be used. With the full-duplex mode, all the data received within the sequence can be used and data can be sent and received at the same time.

Note The full-duplex mode can be used with the RS-232C or four-wire setting. It cannot be used with the 1:N or two-wire setting. (Only for models with the RS-422A/485.)

Clear data using Flush command within the receive buffer at any time (only for the CS/CJ protocol macro)

With the full-duplex mode, the receive buffer is cleared only right before executing the send/receive sequence. If any reception error occurs, the received data can be cleared at any time using the Flush command (receive buffer clear).

Turn the DTR control signal ON and OFF using the Open/Close command (only for the CS/CJ protocol macro)

When connected to a modem device, DTR signal is used to indicate that the Serial Communications Board or Unit (DTE) is ready to send or receive data. Previously, the DTR signal could be turned ON only during the send/receive sequence.

Now the DTR signal can be turned ON or OFF at any time within the send/receive sequence. This allows connection or disconnection with a modem using the protocol macro.

The DTR signal can be set to ON even after the send/receive sequence has completed. The DTR signal can be retained even after changing to another protocol mode (for example, host link).

With this function, remote programming or monitoring can be performed through a remote Programming Device by changing to the host link mode using the STUP instruction after connecting to a modem.

1-2-2 Features of the CX-Protocol

Simultaneous display of tree (hierarchical) view and list (table) view

The CX-Protocol displays data in the form of a tree in the left pane, which gives you easier understanding of the hierarchical structure of data you are setting/monitoring.

Object-oriented operation

Double-clicking target data, instead of choosing from menus, opens its corresponding pop-up dialog, which enables you to create protocols quickly without a thorough understanding of operation menus.

Supplied standard system protocols

Data exchange protocols for OMRON's components (Temperature Controllers, Panel Meters, Bar Code Readers, Modems, and so on) are included as standard system protocols.

Notice that those standard system protocols are included also in the PMSU.

Possible to trace send/receive message

By executing the trace function from the CX-Protocol, the PMSU can trace and save chronological data of send/receive messages up to 670 bytes for the C200HX/HG/HE and up to 1,700 bytes for the CS/CJ. Each data item can be displayed and printed for reading and saved as a trace file.

1-3 Supported PLC Models and Personal Computers

1-3-1 Supported PLC Models

The CX-Protocol supports the following PLCs (Programmable Controllers).

Series	CPU Unit
NJ	NJ501-1300/1400/1500/4300/4400/4500 NJ301-1100/1200
CS (See note 1.)	CS1H-CPU67/66/65/64/63 CS1G-CPU45/44/43/42 CS1H-CPU67H/66H/65H/64H/63H CS1G-CPU45H/44H/43H/42H CS1D-CPU67H/65H/68HA/67HA CS1D-CPU67S/65S/44S/42S/67SA/44SA
CJ	CJ3M-CPU11/12/13/14/15/31/32/33/34/35 CJ2H-CPU68/67/66/65/64/68-EIP/67-EIP/66-EIP/65-EIP/64-EIP CJ2M-CPU11/12/13/14/15/31/32/33/34/35 CJ1G-CPU45/44 CJ1G-CPU45H/44H/43H/42H CJ1G-CPU45P/44P/43P/42P CJ1H-CPU67H-R/66H-R/65H-R/64H-R/67H/66H/65H CJ1M-CPU23/22/21/13/12/11
CP	CP1H-XA□□□□-□ CP1H-X□□□□-□ CP1H-Y□□□□-□
NSJ	G5D (Same for the NSJ5-TQ□□-G5D, NSJ5-SQ□□-G5D, NSJ8-TV0□-G5D, NSJ10-TV0□-G5D, and NSJ12-TS0□-G5D.)
	M3D (Same for the NSJ5-TQ□□- M3D, NSJ5-SQ□□- M3D, and NSJ8-TV0□- M3D.)
C200HX/HG/HE (See note 2.)	C200HX-CPU34-E/44-E/54-E/64-E/34-ZE/44-ZE/54-ZE/64-ZE/65-ZE/85-ZE C200HG-CPU33-E/43-E/53-E/63-E/33-ZE/43-ZE/53-ZE/63-ZE C200HE-CPU-32-E/42-E/32-ZE/42-ZE
CQM1H (See note 3.)	CQM1H-CPU51/61

Note

1. When using the CS1D-H, set the device type as follows:
   CS1D-H with unit Ver.1.1 or later:CS1D-H
   Pre-Ver. 1.1 CS1D-H: CS1H-H
2. CX-Protocol Version 1.0 does not support the C200HX/HG/HE.
3. When using CQM1H-series PLCs, use the C200HG-CPU43 from the C200HX/HG/HE Series as the CPU Unit.

1-3-2 Supported PMSUs

CS-series PLCs

Product name	Installation	Model	Serial communications ports
Serial Communications Boards (Inner Board)	Installed in the CPU Unit	CS1W-SCB21-V1	RS-232C port x 1 + RS-232C port x 1
		CS1W-SCB41-V1	RS-232C port x 1 + RS-422A/485 port x 1
Serial Communications Unit (CPU Bus Unit)	Installed on the CPU Rack or CS Expansion Rack	CS1W-SCU21-V1	RS-232C port x 1 + RS-232C port x 1
		CS1W-SCU31-V1	RS-422A/485 port x 1 + RS422A/485 port x 1

Mounting the Serial Communications Board on the CPU Unit

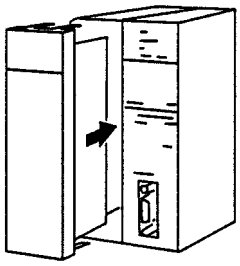

Mounting the Serial Communications Unit on the CPU Rack

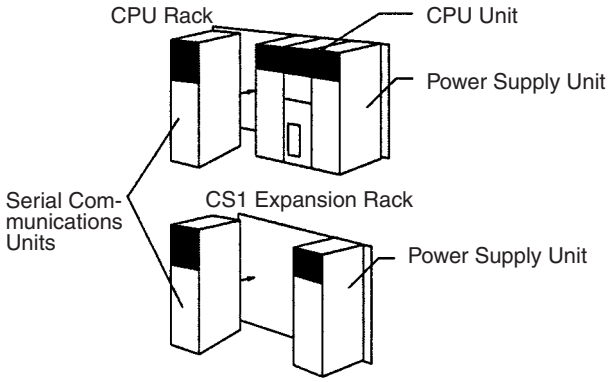

NJ-series, CJ-series, and CP-series PLCs

Product name	Classification	Installation	Model	Serial communications ports
Serial Communications Unit	CJ-series CPU Bus Unit	CPU Rack or CJ Expansion Rack	CJ1W-SCU21-V1 CJ1W-SCU22	RS-232C port x 1 + RS-232C port x 1
			CJ1W-SCU31-V1 CJ1W-SCU32	RS-422A/485 port x 1 + RS422A/485 port x 1
			CJ1W-SCU41-V1 CJ1W-SCU42	RS-232C port x 1 + RS-422A/485 port x 1

Connecting the Serial Communications Unit

- Mounting to an NJ-series and CJ-series CPU Unit

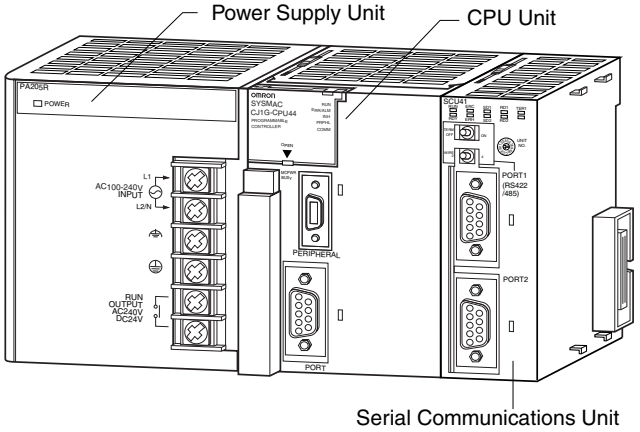

• Mounting to a CP-series CPU Unit

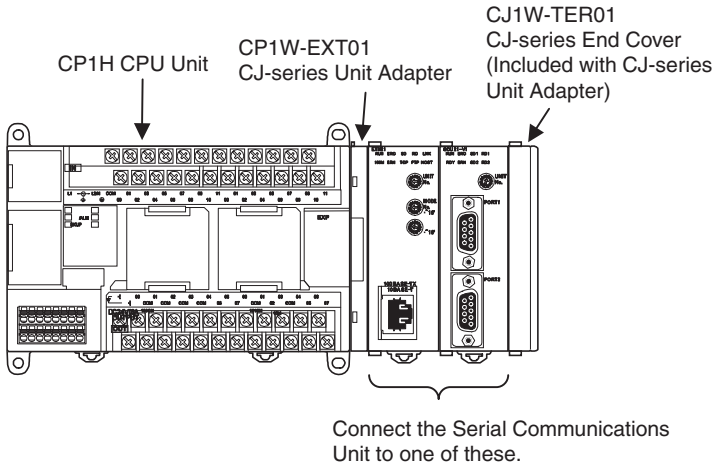

C200HX/HG/HE PLCs

Product name	Installation	Model	Enhanced functions (see note)	Specifications
PMSU	Installed in the CPU Unit	C200HW-COM04-E	---	CPU bus interface + RS-232C port x 1 With the protocol macro function
		C200HW-COM04-EV1	❍	
		C200HW-COM05-E	---	RS-232C port x 2 With the protocol macro function
		C200HW-COM05-EV1	❍	
		C200HW-COM06-E	---	RS-232C port x 1 + RS-422A/485 port x 1 With the protocol macro function
		C200HW-COM06-EV1	❍	

Note 1. The enhanced functions are as follows:

- SUM2 (2's complement of SUM) and CRC-16 are added as error check codes.
- Repeat counter N current value, Sequence End Finish Flag, and Sequence Abort Finish Flag are added to the auxiliary area.
- A check code can be located behind a terminator in messages.
- Swap between high byte and low byte can be designated for error check codes.

2. Mounting the Communications Board on the CPU Unit

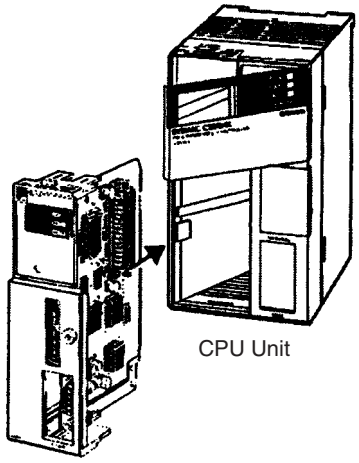

■ **Caution in Using Communications Board for SYSMAC Alpha**

When using Communications Board for SYSMAC Alpha with either of the communications ports set to NT link (1:N), you cannot transfer protocol data to the other port by using CX-Protocol.
When you want to transfer protocol data to the Communications Board, set its communications port to any of the settings other than NT link (1:N) before transfer, and set it to NT link (1:N) after transfer before using the Communications Board.

CQM1H

Product name	Installation	Model	Serial communications ports
Serial Communications Boards	Installed in the CPU Unit	CQM1H-SCB41	RS-232C port x 1 + RS-422A/485 port x 1

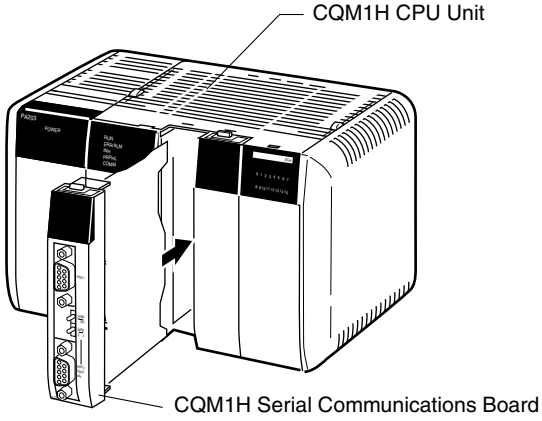

■ **Caution in Using CQM1H Serial Communications Board**

When using CQM1H Serial Communications Board with either of the communications ports set to NT link (1:N), you cannot transfer protocol data to the other port by using CX-Protocol.
When you want to transfer protocol data to the Serial Communications Board, set its serial communications port to any of the settings other than NT link (1:N) before transfer, and set it to NT link (1:N) after transfer before using the Serial Communications Board.

Note The following restrictions exist when using the CX-Protocol to create and edit protocol macros, transferring data between the Board and personal computer, or performing other functions for the CQM1H.

- Always turn ON pin 8 on the DIP switch on the front on the CQM1H CPU Unit. (When pin 8 is ON, you will not be able to connect the peripheral port, built-in RS-232C port, or serial communications ports on Boards mounted in the CPU Unit to the CX-Programmer or other Support Software running on a personal computer.)
- Set the device type to “C200HG” and the CPU type to “CPU43.”
- Other than these restrictions, functionality will be the same as for the C200HX/HG/HE PLCs.

1-3-3 Supported Personal Computers

Refer to the *CX-One Setup Manual* (Cat. No. W463) for the supported personal computers.

1-4 System Configuration

1-4-1 Connecting the CX-Protocol and the PLC

For the CS/CJ Connect the peripheral port on the CPU Unit to the built-in RS-232C port.

Note Can be connected to the PMSU port if the port is set to the host link mode.

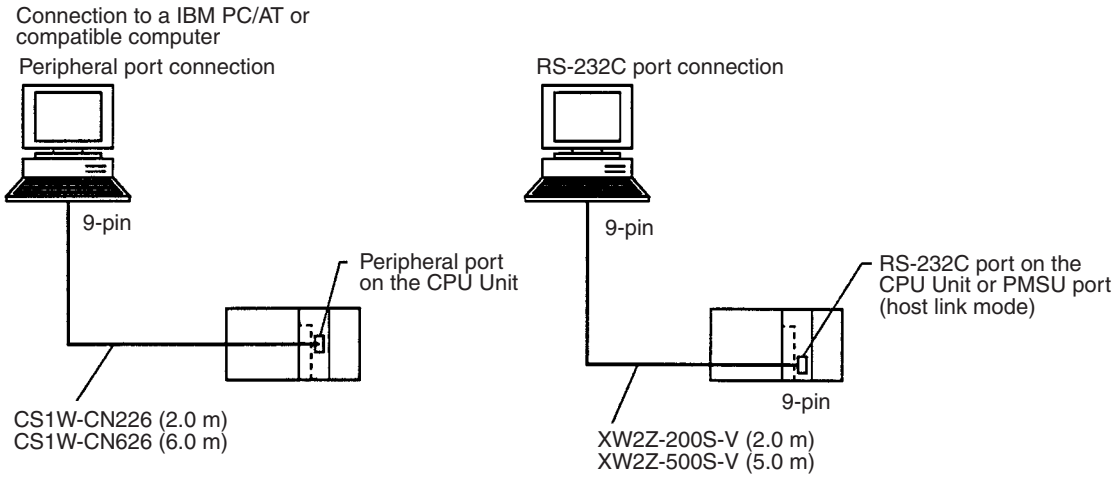

Note When using the RS-232C Cable to connect to a CPU Unit peripheral port, as shown below, use the CS1W-CN118.

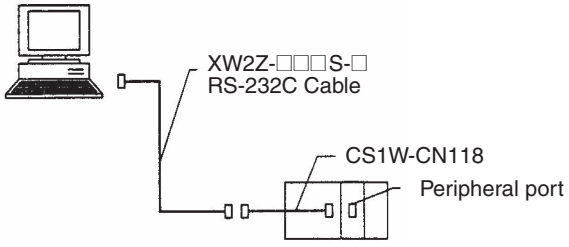

When combining the CS1W-CN118 with the RS-232C Cable, connections cannot be made using the **Toolbus**. Make connections using **Host Link (SYSWAY)**.

CP Series

Computer	Computer port	CPU Unit port	Cable length	Cable
IBM PC/AT or compatible	USB port (A-type connector)	USB port (B-type connector	5 m max.	Commercially available USB 1.1 or 2.0 cable

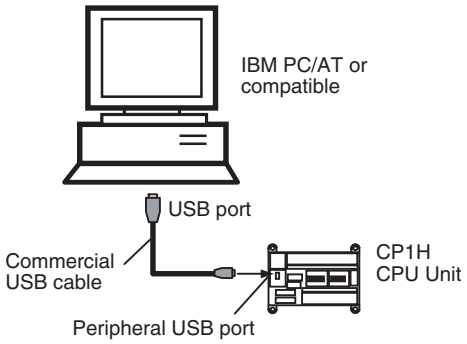

NJ Series

Direct USB Connection

Computer	Computer port	CPU Unit port	Cable length	Cable
IBM PC/AT or compatible	USB port (A-type connector)	USB port (B-type connector	5 m max.	Commercially available USB 1.1 or 2.0 cable

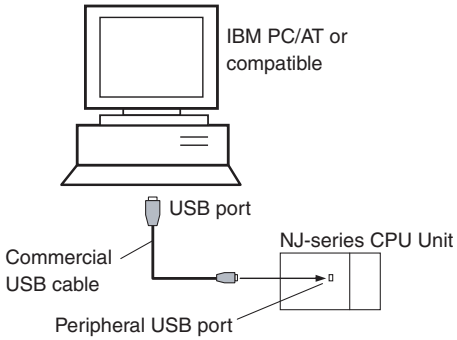

Direct Ethernet Connection

Computer	Computer port	CPU Unit port	Cable length	Cable
IBM PC/AT or compatible	Ethernet port	EtherNet/IP port		

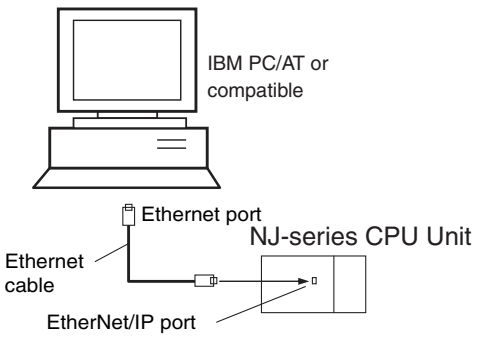

Note If an RS-232C Option Board (CP1W-CIF01) is mounted, it is also possible to use a XW2Z-200S/500S-V/-CV RS-232C Cable to connect an RS-232C port on the computer to the RS-232C Option Board.

For the C200HX/HG/HE Connect the peripheral port on the CPU Unit to the built-in RS-232C port.

Note Can be connected to the PMSU port if the port is set to the host link mode.

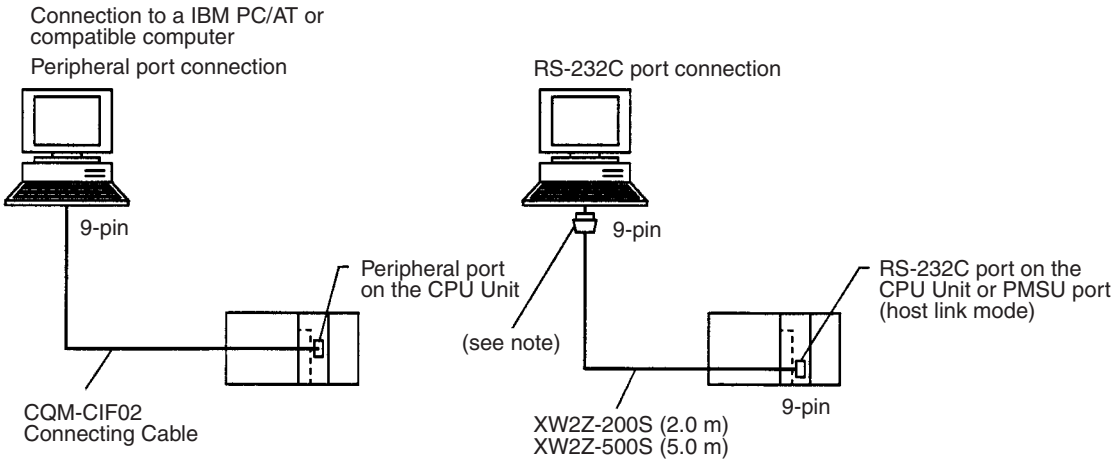

Note For IBM PC/AT or compatible computers, a conversion connector from D-sub 25P (female) to 9P (female) is required for the personal computer side connector.

1-4-2 Connecting the PLC to External Devices

For the CS/CJ The following figure shows the system configuration of the PMSU in the PLC and external devices. The RS-232C port provides 1:1 connection and the RS-422A/485 port 1:N connection.

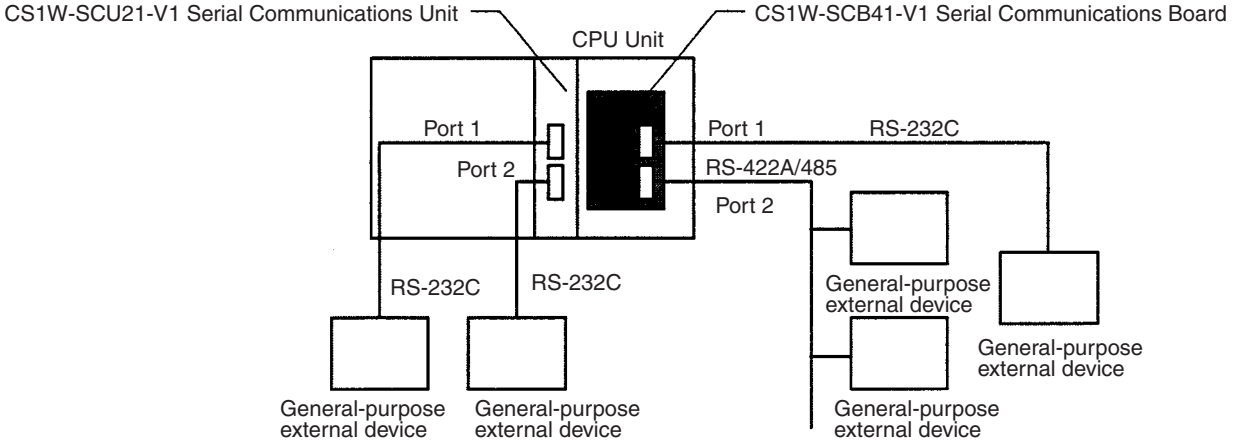

Types of PMSUs

Model Name	Model	Communications port	Communications function			
			Protocol macro	Host link	NT link	Cyclical test
Serial Communications Boards	CS1W-SCB21-V1	RS-232C (port 1)	❍	❍	❍	❍
		RS-232C (port 2)	❍	❍	❍	❍
	CS1W-SCB41-V1	RS-232C (port 1)	❍	❍	❍	❍
		RS-422A/485 (port 2)	❍	❍ (see note)	❍	❍

Model Name	Model	Communications port	Communications function			
			Protocol macro	Host link	NT link	Cyclical test
Serial Communications Units	CS1W-SCU21-V1	RS-232C (port 1)	❍	❍	❍	❍
		RS-232C (port 2)	❍	❍	❍	❍
	CS1W-SCU31-V1	RS-422A/485 (port 1)	❍	❍	❍	❍
		RS-422A/485 (port 2)	❍	❍	❍	❍
	CJ1W-SCU21-V1 CJ1W-SCU22	RS-232C (port 1)	❍	❍	❍	❍
		RS-232C (port 2)	❍	❍	❍	❍
	CJ1W-SCU31-V1 CJ1W-SCU32	RS-422A/485 (port 1)	❍	❍	❍	❍
		RS-422A/485 (port 2)	❍	❍	❍	❍
	CJ1W-SCU41-V1 CJ1W-SCU42	RS-232C (port 1)	❍	❍	❍	❍
		RS-422A/485 (port 2)	❍	❍	❍	❍
Devices to be connected			General-purpose external devices	Host computer programming devices	PT	None

Note Cannot be used with two-wire models.

For the C200HX/HG/HE

The following figure shows the system configuration of the PMSU and external devices. The RS-232C port provides 1:1 connection and the RS-422A/485 port provides 1:N connection.

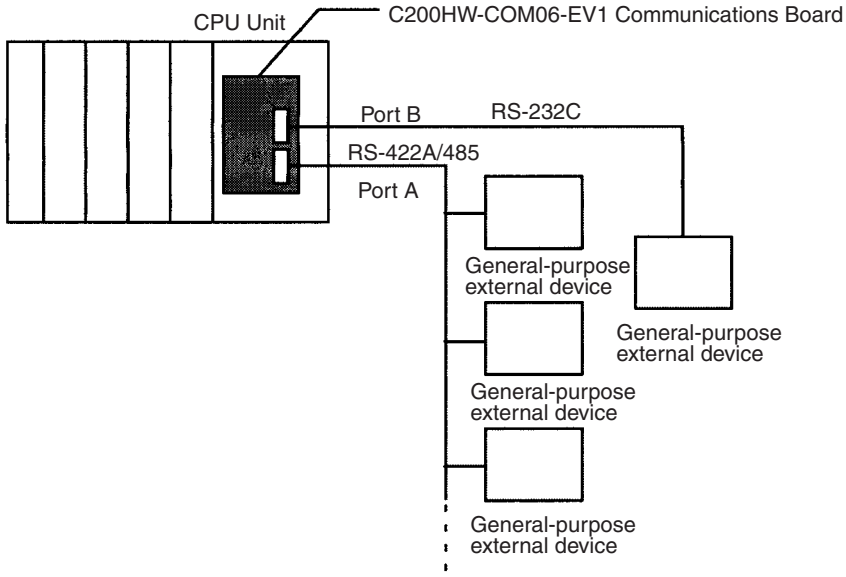

Types of PMSUs (Only Models Having the Protocol Macro Function)

Model	Communications port	Communications Function					
		Protocol macro	Host link	No-procedural	1:1 link	NT link 1:1, 1:N	CPU bus
C200HW-COM04-E/EV1	CPU bus interface	---	---	---	---	---	❍
	RS-232C (port A)	❍	❍	❍	❍	❍	---
C200HW-COM05-E/EV1	RS-232C (port A)	❍	❍	❍	❍	❍	---
	RS-232C (port B)	❍	❍	❍	❍	❍	---
C200HW-COM06-E/EV1	RS-422A/485 (port A)	❍	❍ (see note 2)	❍ (see note 2)	❍ (see note 2)	❍	---
	RS-232C (port B)	❍	❍	❍	❍	❍	---
Devices to be connected		General-purpose external devices	Host computer programming devices	General-purpose external devices	PLC	PT	Interface with Communications Units

Note 1. C200HW-COM□□-EV1: Enhanced function model

2. Not available for two-wire models.

1-5 Protocol Macro

1-5-1 Protocol Macro Outline

Protocol macro is a function that creates macros for communications protocols that conform to specifications for communications between general-purpose external devices that have a serial communications port.

Generally the protocol macro performs two kinds of function:

- Creation of communications frames (messages).
- Creation of procedures for sending and receiving communications frames (messages).

Creation of Communications Frames (Messages)

1,2,3... 1. Communications frames, referred to here as "messages" and which can be understood by general-purpose external devices, can be created according to the communications specifications.

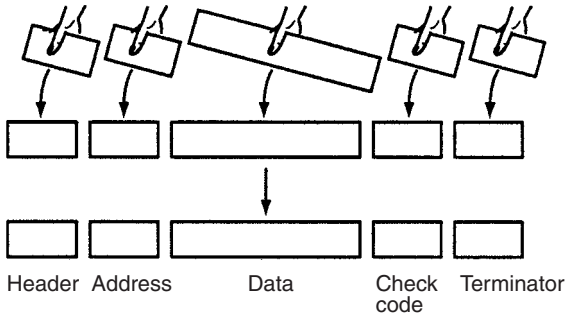

Note In general, the data area of a send message contains a command code and data. The data area of a receive message contains a response code.

2. Variables for reading data from (or writing data to, if receiving) the I/O memory (data memory, for example) of the CPU Unit, can be integrated into the messages.

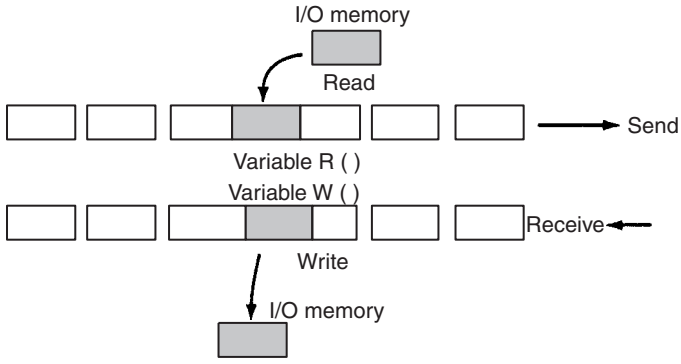

This function has the following advantages:

- Ladder program processing will not be necessary at the CPU Unit when, for example, sending messages after arranging them all in data memory.

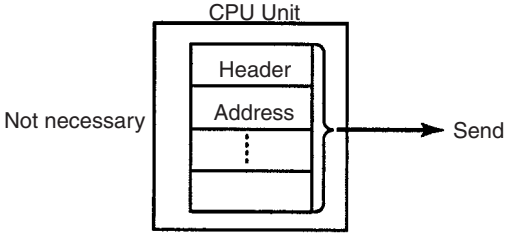

- The components of the previously created messages are stored in memory at the PMSU, not the CPU Unit. When sending or receiving data, the CPU Unit only has to execute the PMCR instruction.

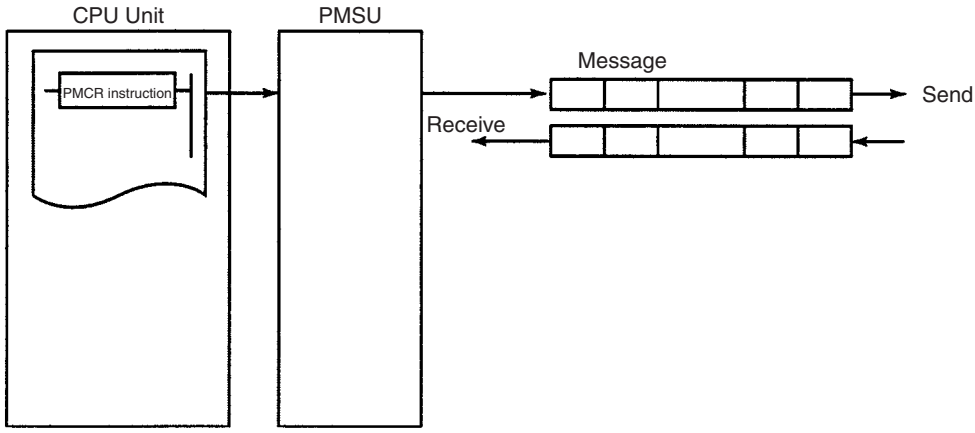

- When handling one part of the I/O memory data, if the variable required for reading that data has been integrated into a send message, the PMSU will automatically read the required data from the I/O memory of the CPU Unit when the PMSU sends the message. Similarly, when writing data from one part of a received message into I/O memory, if the variable required to read the data has been integrated into the reception settings message, the PMSU will automatically write the data at the designated position in the message into I/O memory when the PMSU receives the message.

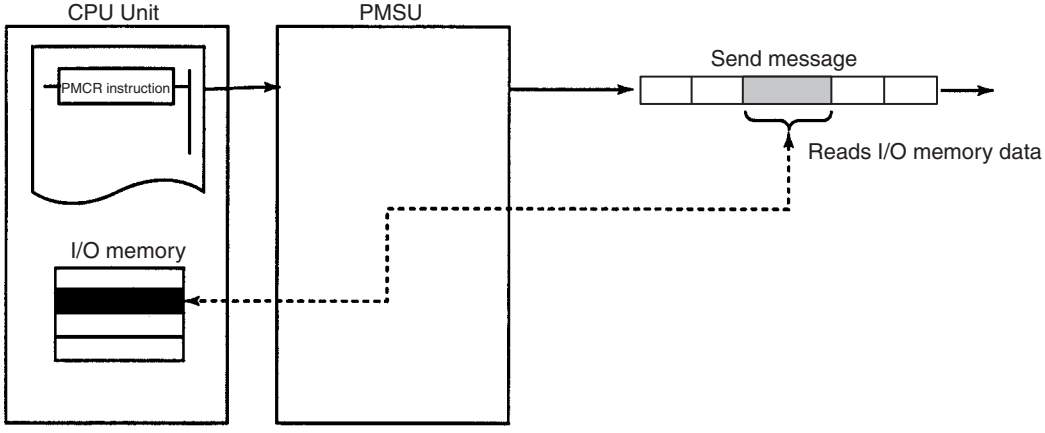

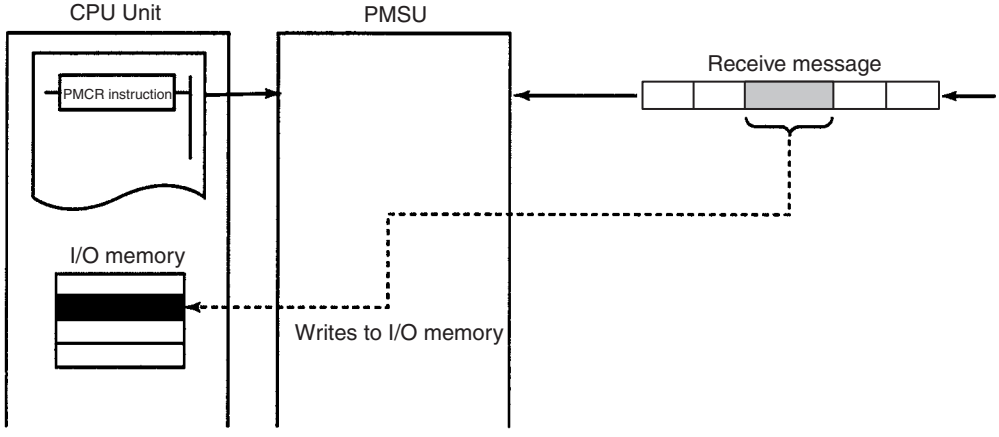

Creating Procedures for Sending and Receiving Communications Frames (Messages)

1,2,3... 1. This function enables all the processing needed to send or receive a message to be handled as one step, and possesses all the commands (step commands), such as Send, Receive, Send&Receive and Wait, that are needed for each step.

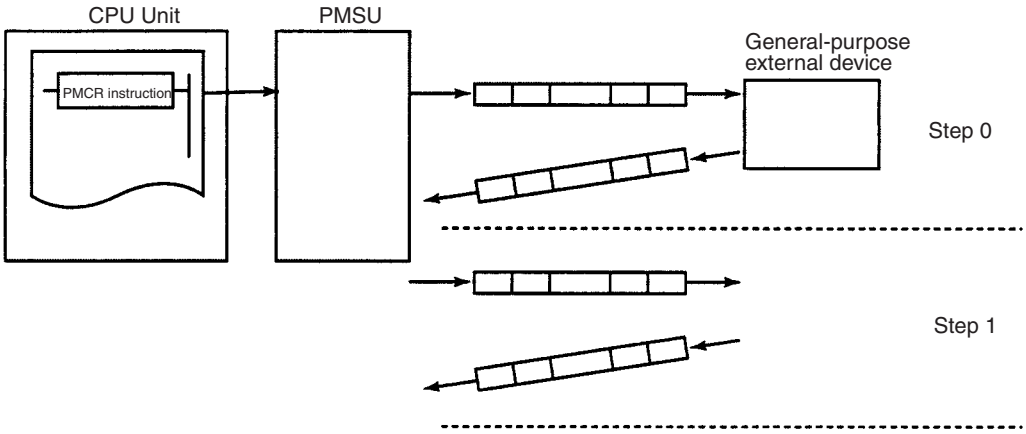

2. This step can be set so that the next process (step/end) depends on the processing result of the previous step. In particular, it is possible to set the sequence so that the next process depends on the contents of one or several set receive messages.

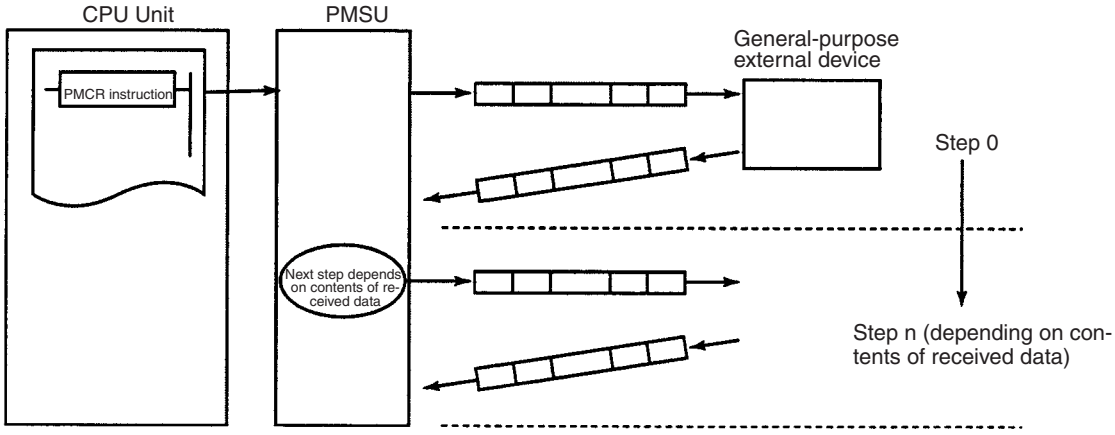

Note 1. A send message created with a protocol macro will perform settings for messages that are actually sent.

2. A receive message created with protocol macro will set an expected message for comparison with messages that are actually received.

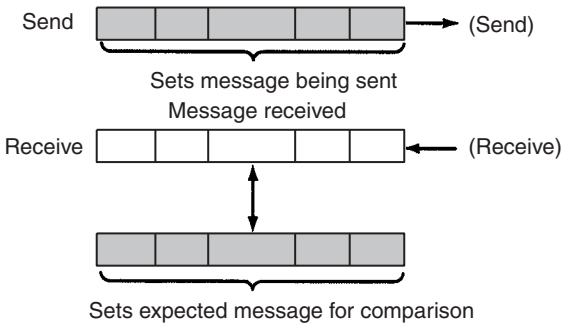

1-5-2 Standard System Protocol

Data exchange protocols (called standard system protocols) for OMRON Units (Temperature Controllers, Panel Meters, Bar Code Readers, Modems, etc.) have been installed into the PMSU. By setting the prescribed receive/send data and executing the PMCR instruction, therefore, data exchange can be easily performed with OMRON Units.

1-6 Protocol Macro Structure

The protocol consists of a communications sequence ("sequence" in short), which is an independent process for the general-purpose external device (for example, reading a process variable from a Temperature Controller). One sequence consists composed of some steps, each of which is composed of a Send, Receive, or Send&Receive command, send/receive message, branch or end according to the result of the process.

For example, the sequence to read a process value from the temperature controller sends to the controller a send message (a string containing the read command with a header, address, check code, and terminator), and then receives a receive message (a string containing a response to the read command with a header, address, check code, and terminator).

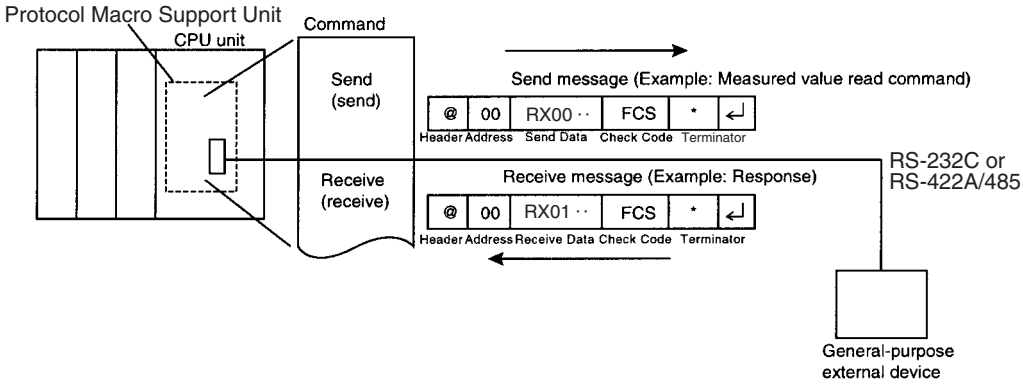

The sequence determines, according to the result of process, whether to send the same send message again (called retry) or execute the next process (reading process value from the Temperature Controller linked to another address, etc.), for example.

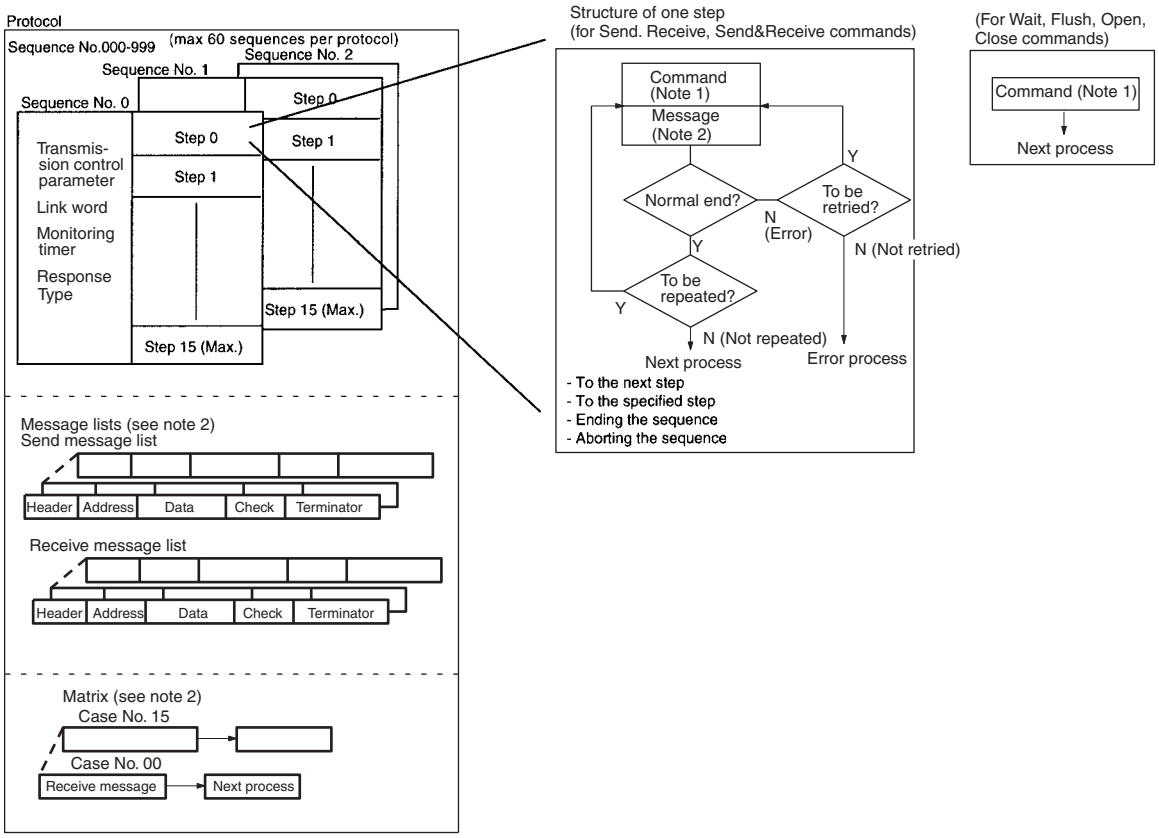

Note 1. The command is Send, Receive, Send&Receive, Wait, Flush, Open, or Close.

- A step can be retried with the Send&Receive command.
- A step can wait to transmit a send message upon the Send or Send&Receive commands.
- A step can select the next process according to the content of the received message by using a matrix.

2. There are three types of messages: send messages, receive (expected) messages, and matrices that switch processes according to multiple receive (expected) messages. Those messages are managed by lists and separated from sequences.

1-6-1 Step Structure

Each step has the fixed processing framework as follows. Users create protocols by setting parameters for each framework.

One step contains one command (Send, Receive, Send&Receive, Wait, Flush, Open, or Close) and one or two messages (send, receive, or send/receive). The step changes from one to another by the Next Process within the step.

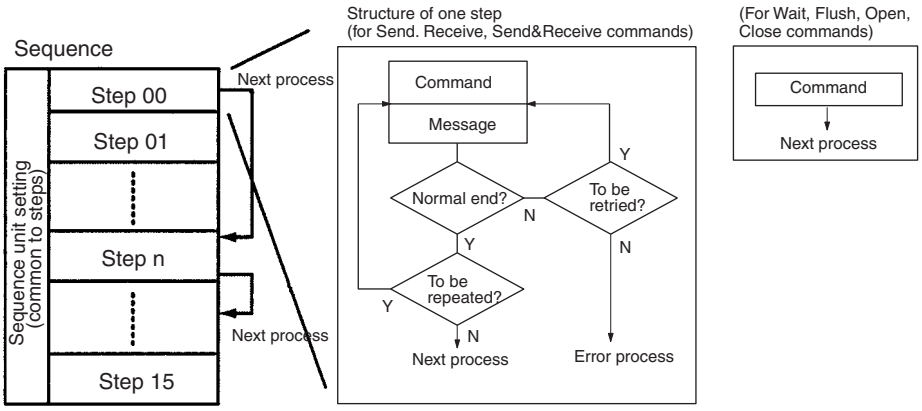

Note The Wait, Flush, Open, and Close commands are for the CS/CJ protocol macros. (They are not supported by the C200HX/HG/HE protocol macros.)

Setup Parameters that Commonly Affect Steps (in Each Sequence)

Parameter	Description
Transmission control parameter	Sets the control mode for control signals including flow control.
Link word	Sets area in which data is shared between the PLC and the PMSU.
Monitoring time	Sets monitoring time for send and receive process.
Response type	Sets timing of writing receive data into PLC's I/O memory.

Setup Parameters for Each Step

Parameter		Setup content
Command		Send, Receive, Send&Receive, Wait, Flush, Open, or Close
Message	Send message	Sets message to be sent for the Send command.
	Receive message	Sets message expected to be received for the Receive command.
	Send message and receive message	Sets messages to be sent and expected to be received for the Send&Receive command.
	Matrix	Selects the next process according to the content of the received message when the command is Receive or Send&Receive and up to 15 messages can be expected to be received.
Repeat counter		The number of times iterating the step (0 to 255). Using this parameter N allows to change the content of send and receive messages.
Retry count		(Used only for Send&Receive command) Retries the command when a retry cause such as an error occurs (0 to 9 times).
Send wait time		(Used only for Send or Send&Receive command) Set the waiting time before starting to send data.
With/Without Response Writing		Specifies whether to write received data.
Next process		Sets the next step to which the step transits or the sequence exits if it ends normally.
Error process		Sets the next step to which the step transits or the sequence exits if it ends abnormally.

1-7 Data Created by the CX-Protocol

The CX-Protocol creates/manages data by file unit, called “project.”
Project files consist of the following data:

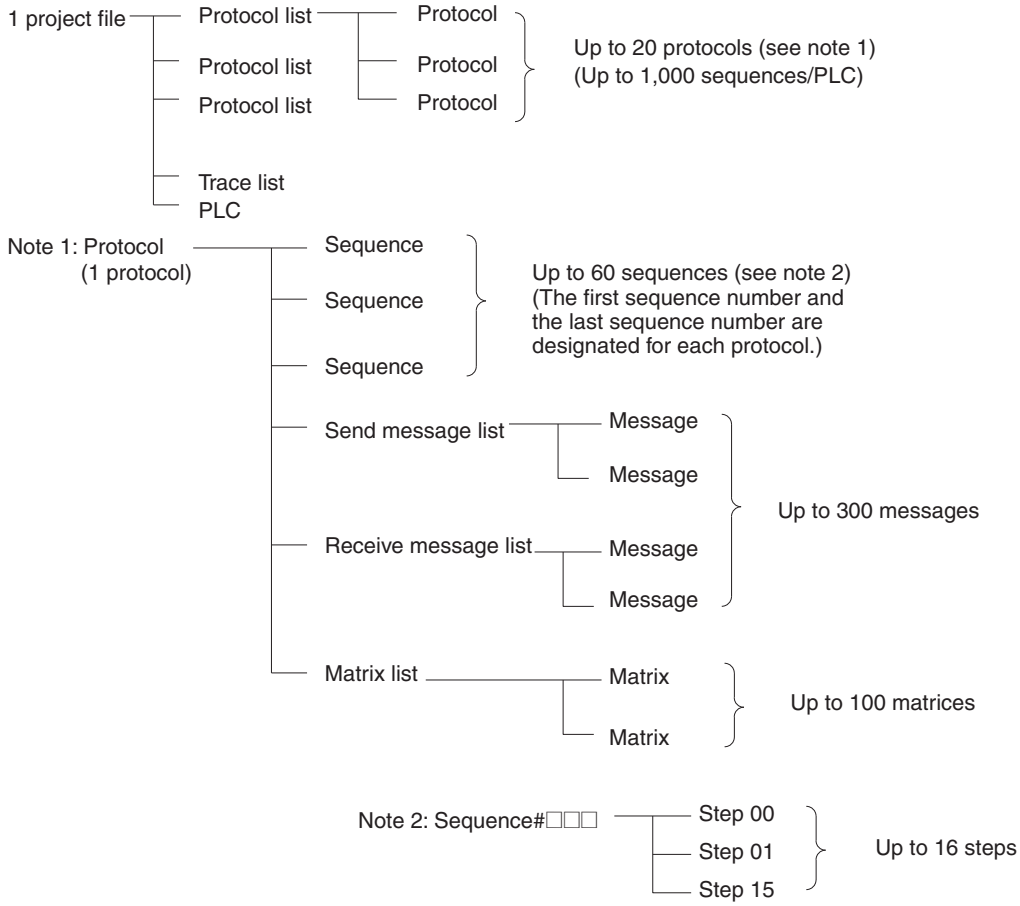

Project files are stored with a file extension .PSW.

Note To transfer standard system protocols to the PMSU or create a new protocol by partially modifying one of the standard system protocols, first copy the required standard system protocol to another project file and then use the project file. The standard system protocols themselves cannot be edited or transferred.

The standard system protocols have been installed into the PMSU at our factory.

Files that can be Read or Written by CX-Protocol

Type of file	Content	File extension	Read	Write
CX-Protocol/SYSMAC-PST project files (see note)	CX-Protocol project files consist of the following: Protocol data PLC (communications conditions between PLC and personal computer, communications port (A/B) setting of the PSB or the port (1/2) setting of the Serial Communications Board/ Unit) Trace data	*.PSW	Yes	Yes
PSS system setting file	File that contains communications port (A/B) setting data of the PSS Protocol Macro Support Unit	*.pts	Yes	No
PSS protocol file	File that contains only PSS protocol data	*.pt1	Yes	No
Trace data file	File that contains only trace data	*.ptr	Yes	No

Note CX-Protocol project files cannot be read by the PSS (DOS version of Protocol Support Software) or the SYSMAC-PST.

Refer to *11-3 Importing Protocol Data from PST/PSS Files* for loading PST project files or PSS files.

1-8 Main Screens of the CX-Protocol

The CX-Protocol displays the tree view of the hierarchical data structure in the left pane. For the highlighted data in the left pane, the list view of its contents is displayed in the right pane.

Contents of a Project

A project consists of protocol list, trace list, and PLC.

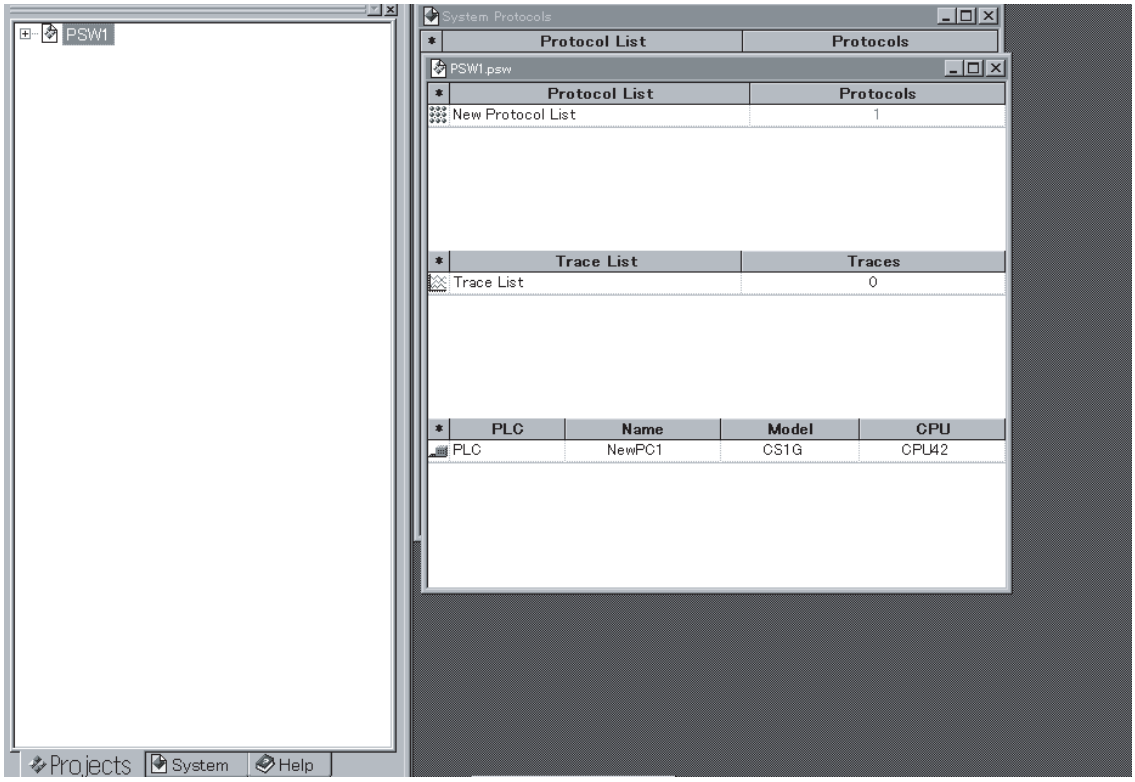

Display of Sequences in a Protocol

A protocol consists of sequences.

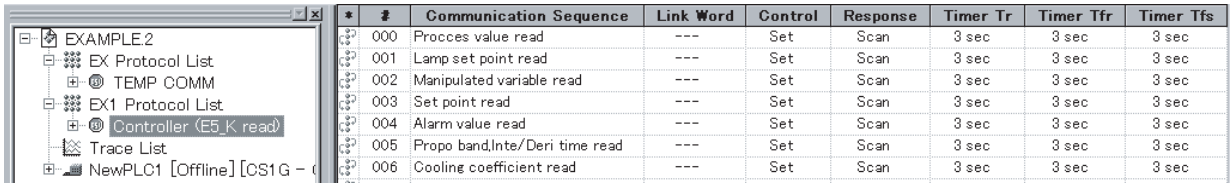

Display of Each Step in a Sequence

A sequence consists of steps and their setup parameters for each sequence (transmission control parameter and so on).

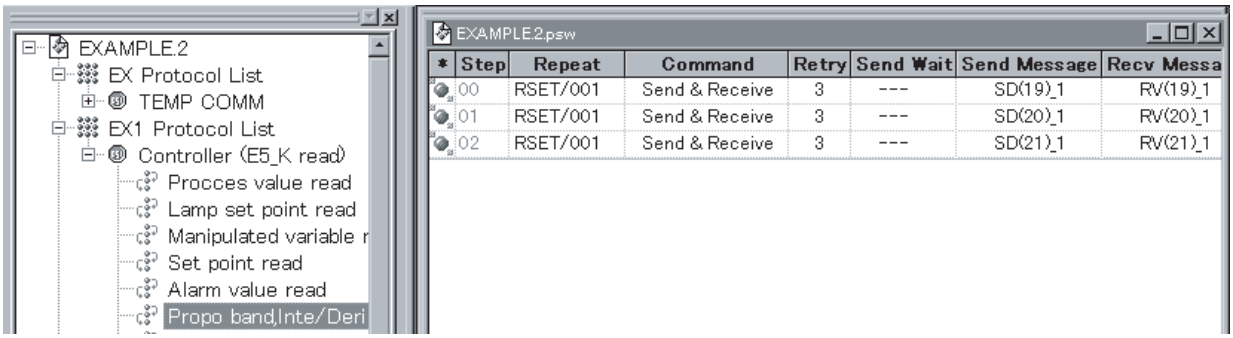

Display of Messages in a Message List

Messages are managed separately from sequences. Messages can be referred to by their names from each step in a sequence.

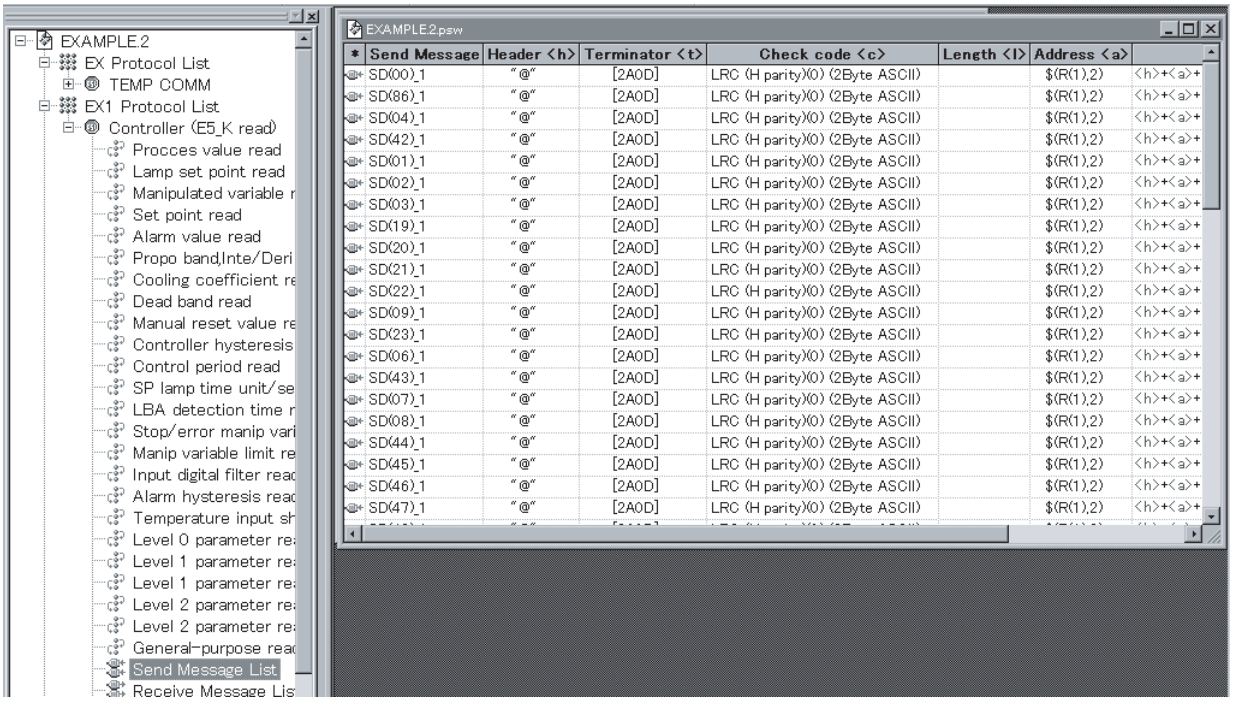

Display of Cases in a Matrix

Matrices are managed separately from sequences. Matrices can be referred to by their names from each step in a sequence.

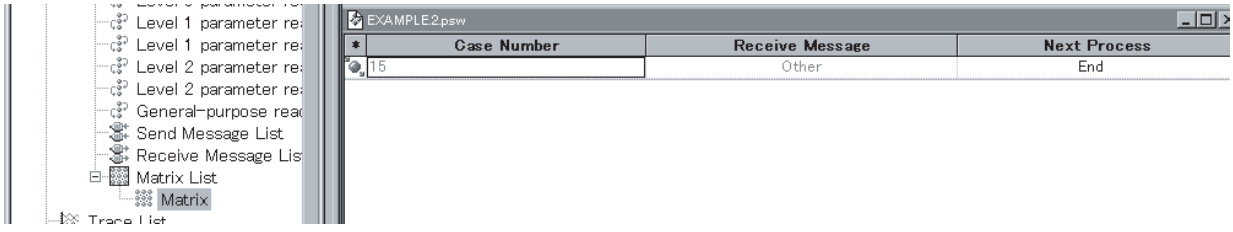

Display of Trace Data

Displays the send and receive messages in chronological order up to the maximum of 1,700 bytes (characters) for the CS/CJ and 670 bytes (characters) for the C200HX/HG/HE.

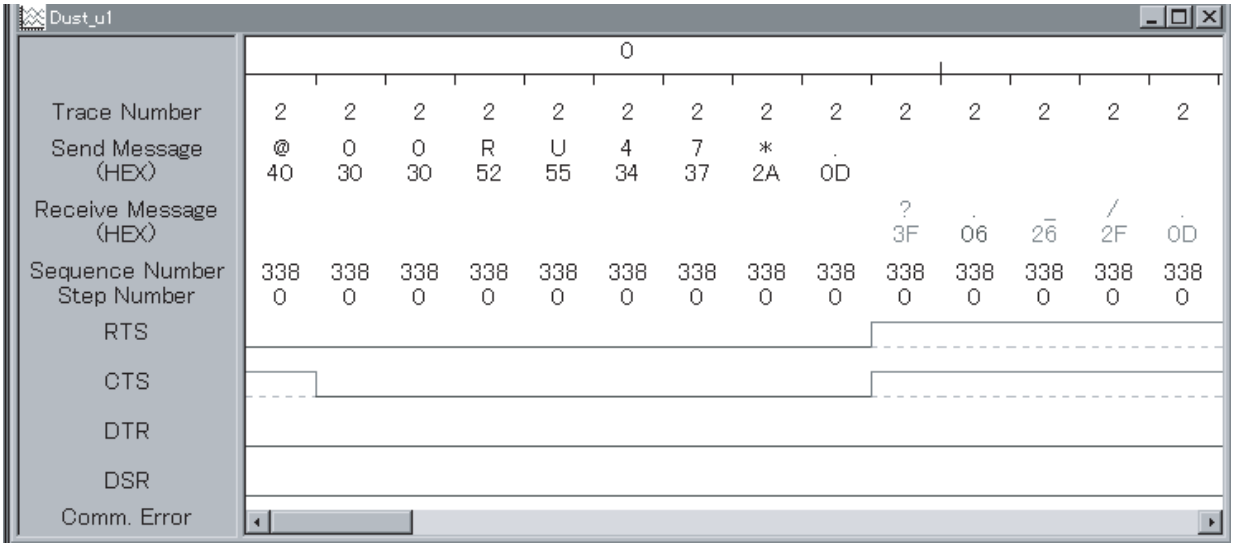

1-9 Overview of Project Creation

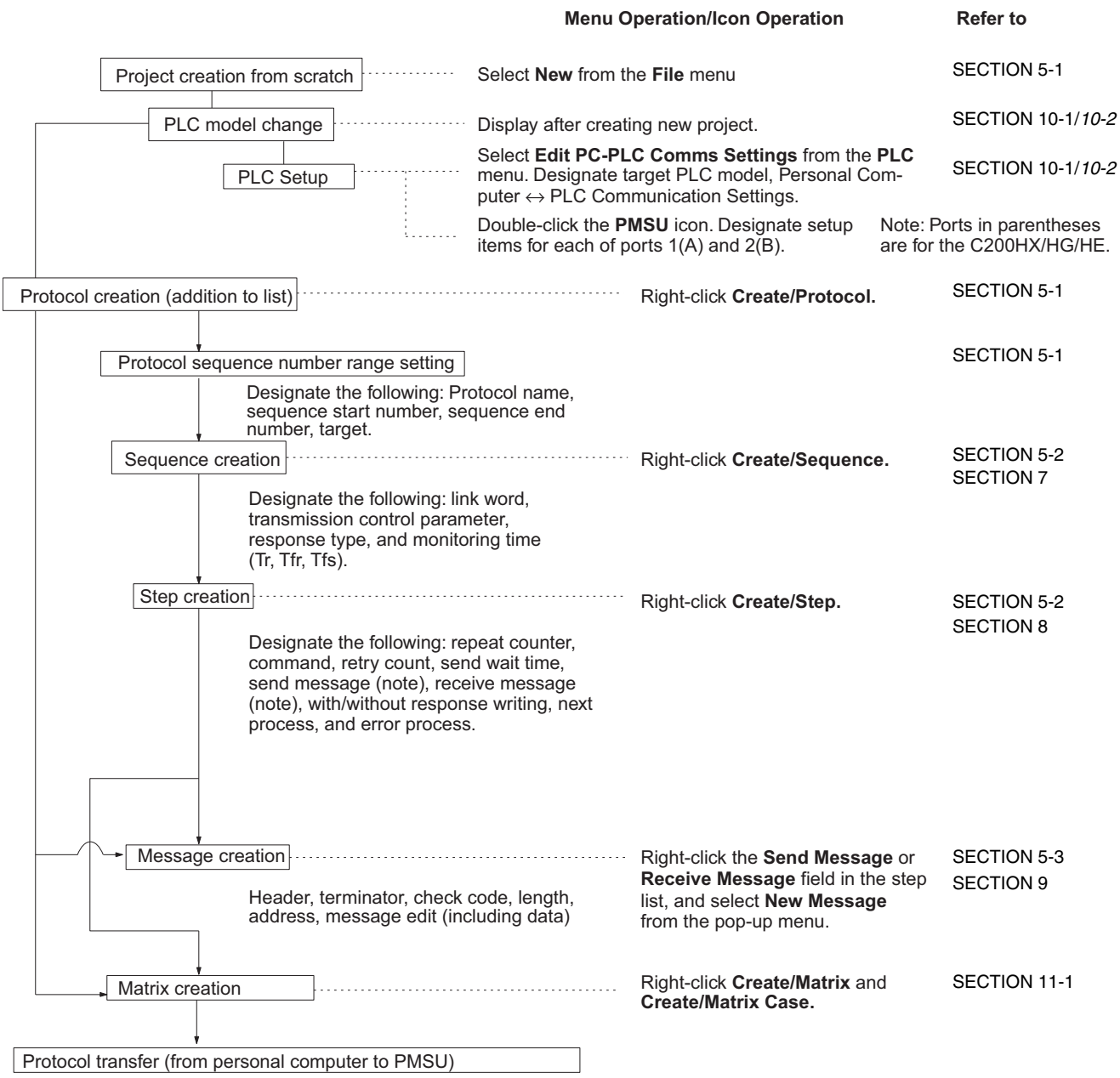

Note

1. A send message in a step can be designated by choosing its message name in the send message list.
2. A receive message in a step can be designated by choosing its message name in the receive message list or matrix name in the matrix list.
3. Therefore, you can create a message part during step creation more easily by choosing a message name of the desired send message, receive message, or matrix that you have created in advance.

1-10 Incorporated Standard System Protocol

The CX-Protocol together with the PMSU provides the following 13 types of incorporated standard system protocols. (There are 12 types for the Communications Board of the C200HX/HG/HE because it does not support CompoWay/F.)

The protocols can be displayed by selecting the **System** Tab of the project workspace.

Note To transfer standard system protocols to the PMSU or create a new protocol by partially modifying one of the standard system protocols, first copy the required standard system protocol to another project file and then use the project file. The standard system protocols themselves cannot be edited or transferred.

The standard system protocols have been installed into the PMSU at our factory.

Protocol name	Function
CompoWay/F	Protocol for sending a CompoWay/F command and receiving responses from the devices incorporating the CompoWay/F protocol (Slave function). This protocol operates only with the CS/CJ.
Controller (E5_K read)	Protocol for controlling an E5□K Digital Controller via the PMSU. Procedures for reading the MV and operating parameter setting.
Controller (E5_K write)	Protocol for controlling an E5□K Digital Controller via the PMSU. Procedures for writing set points and operating parameters.
Temp Controller (E5ZE read)	Protocol for controlling an E5ZE Temperature Controller via the PMSU. Procedures for reading measured temperature and operating parameter setting.
Temp Controller (E5ZE write)	Protocol for controlling an E5ZE Temperature Controller via the PMSU. Procedures for writing control temperatures and operating parameters.
Temp Controller (E5_J)	Protocol for controlling a E5□J Temperature Controller via the PMSU. Procedures for writing set points, reading output amounts, and reading/writing operating parameters.
Controller (ES100_)	Protocol for controlling a ES100□ Temperature Controller via the PMSU. Procedures for writing adjustment parameters, reading operation amounts, and writing/reading operating parameters.
Intelligent Signal Processor (K3T_)	Protocol for controlling a Digital Panel Meter via the PMSU. Procedures for writing comparison values and reading display values are set.
Bar Code Reader (V500/V520)	Protocol for controlling a Bar Code Reader via the PMSU. Procedures for controlling the Bar Code Reader in remote mode, reading the data that has been read by the Bar Code Reader, and reading/writing operating parameters.
Laser Micro Meter (3Z4L)	Protocol for controlling a Laser Micrometer via the PMSU. Procedures for controlling the Laser Micrometer in remote mode, reading measured data, and writing/reading operating parameters.
Visual Inspection System (F200/300/350)	Protocol for controlling a Visual Inspection System via the PMSU. Procedures for controlling the Visual Inspection System in remote mode, reading measured values, and writing/reading operating parameters.
ID Controller (V600/620)	Protocol for controlling an ID Controller via the PMSU. Procedures for performing Read/Write operations of the ID Controller and writing/reading operating parameters.
Hayes modem AT commands	Protocol for controlling a Hayes modem (AT commands) via the PMSU. Procedures for initialization of the modem, dialing, data transmission, switching to escape mode, and disconnecting the line.

For more information on each protocol, refer to the *C200HX/HG/HE Communications Board Operation Manual (W304)*, *CS/CJ Series Serial Communications Board/Unit Operation Manual (W336)*, and *CQM1H Series Serial Communications Board Operation Manual (W365)*.

Example: Protocol for the Controller (E5_K read)

Sequence No.	Communications sequence
000	Read process value
001	Read set point during SP ramp
002	Read MV
003	Read set point

Sequence No.	Communications sequence
004	Read alarm value
005	Read proportional band, integral time, and derivative time

1-11 Basic Procedure of the Protocol Macro Usage

1-11-1 For the CS/CJ

Procedure 1 PMSU Setup

Setting the Serial Communications Board (for Serial Communications Boards with RS-422A/485)

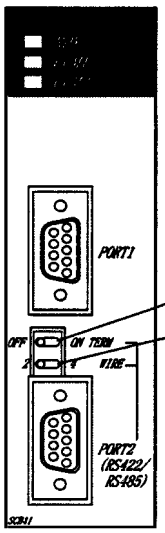

Terminating resistance ON/OFF switch

2-wire/4-wire Selection switch

Setting the Serial Communications Unit Front rotary switch setting

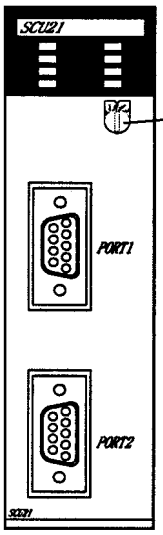

Unit No. setting switch

Set the unit No. in a range from 0 to F (0 to 15).

Procedure 2 PMSU Mounting

Mounting the Serial Communications Board

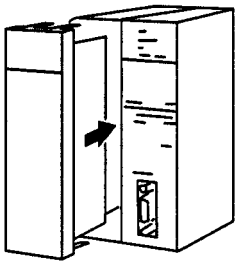

Mounting the Serial Communications Unit

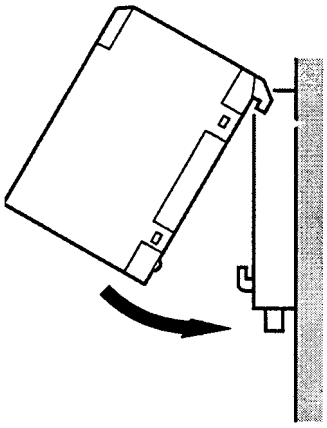

Procedure 3 Connection with External Devices

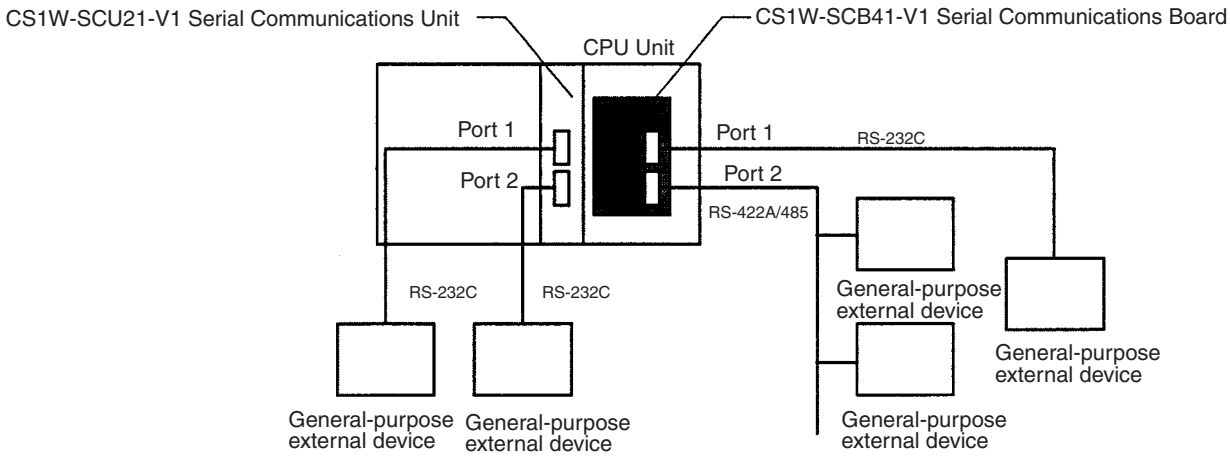

Note For connector pin arrangements and connection methods, refer to the *CS/CJ Series Serial Communications Boards/Unit Operation Manual (W336)* and other relevant manuals for general-purpose external devices.

Procedure 4 Initial Setting

1,2,3...

1. For Connecting Cables between the PLC and the CX-Protocol, refer to *1-4 System Configuration*.
2. PLC Setup of the CPU Unit and the PMSU.

   PLC Setup for Connecting the PLC to the CX-Protocol.

   Perform the following setups (a) and (b). The communications conditions designated in (a) and (b) must be coherent.

   a) Using the CX-Protocol, designate a target PLC model and perform the communications setup between the personal computer and the PLC.

   b) Using a Programming Device for PLC's CPU Unit, perform the PLC setup according to a connected port.

PLC Setup of the Serial Communications Board
Allocated DM area: D32000 to D32767

D32000 to D32009	PLC setup of port 1
D32010 to D32019	PLC setup of port 2
D32020 to D32767	Reserved by the system

PLC Setup of the Serial Communications Unit
Allocated DM area: D30000×100 Unit No.

Unit No.	DM area
0	D30000 to D30099
1	D30100 to D30199
2	D30200 to D30299
3	D30300 to D30399
4	D30400 to D30499
5	D30500 to D30599
6	D30600 to D30699
7	D30700 to D30799
8	D30800 to D30899
9	D30900 to D30999
A	D31000 to D31099
B	D31100 to D31199
C	D31200 to D31299
D	D31300 to D31399
E	D31400 to D31499
F	D31500 to D31599

m to m+9: PLC setup of port 1
m+10 to m+19: PLC setup of port 2
m+20 to m+99: Not used

Example: Setting the Default Communications Conditions (m=D30000+100×Unit No.)

Board		Unit		Bits	Settings
Port 1	Port 2	Port 1	Port 2		
D32000	D32010	m	m+10	15	0: Start bit=1 bit, Data length=7 bits, Parity=Even, Stop bit=2 bits
				11 to 08	6: Protocol macro
D32001	D32011	m+1	m+11	03 to 00	0: Baud rate: 9600 bits/s
D32008	D32018	m+8	m+18	15	0: Half-duplex
D32009	D32019	m+9	m+19	15 to 00	00C8 Hex: Protocol send/receive data bytes: 200 bytes max.

Using the CX-Protocol, make the settings for communications ports 1 and 2 of the PMSU and transfer the settings to the PLC.

For more information, refer to *10-6 PMSU Communications Port Settings* and *10-7 Transfer of Communications Port Setting Data to PLC.*

3. External Device Settings
   Perform required processes including DIP switch settings on external devices.

Procedure 5 Protocol Design

Refer to the *SECTION 4*, *SECTION 5*, and *SECTION 6*.

1,2,3...

1. Creates the status transition chart of the communications sequence.
2. Disassembles the status transition chart into sequences and steps, and set them up.
3. Creates the send and the receive messages.

Procedure 6 Project (Protocol Data) Creation and Transfer by CX-Protocol

Refer to *1-9 Overview of Project Creation*.

1,2,3...

1. Creates a new project.
   Refer to *5-1 Creating Projects and Protocols.*
2. Creates a new communications sequence.
   Refer to *5-2 Creating Sequences and Steps* and *7-1 Setting Sequences.*
3. Creates each step.
   Refer to *5-2 Creating Sequences and Steps* and *8-1 Step Setting.*
4. Creates each message. (See note.)
   Refer to *9-1 Creating Messages.*
5. Transfers the created projects to the PMSU.
   Refer to *11-1 Transferring and Reading Protocol Data between the Computer and PMSU.*

   Note Each step can be created after each message creation by designating the message name.

Procedure 7 The Ladder Program Creation

1,2,3...

1. Allocates a function code for the PMCR instruction.
   Example: For the Serial Communications Board

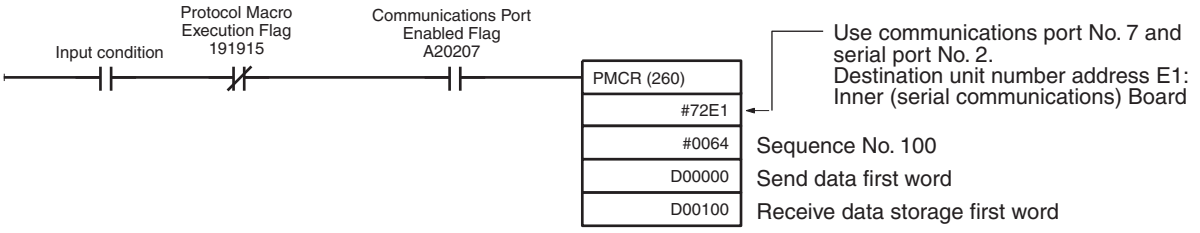

When the input condition is set to “ON” and the Protocol Macro Execution Flag (191915: port 2) is set to “OFF,” the communications sequence number 100 registered on the PMSU is called to send and receive data via port 2 of the PMSU if the Communications Port Enabled Flag (A20207: internal logic port of the communications port No. 7 is used) is ON.

The send data is sent out from the next D00001 according to the number of effective words (number of words including D00000) designated by D00000.

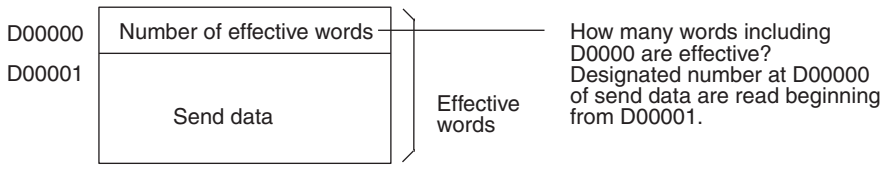

The receive data is stored in the successive words beginning from D00101 for the number of effective words actually stored in D00100 (number of words including D00100).

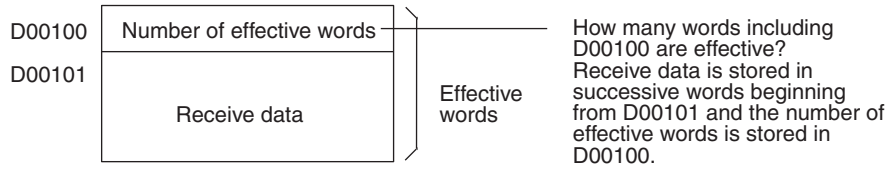

Note Receive data set before the PMCR is executed will not change if receive processing fails.

2. Execute the PMCR instruction.

Procedure 8 Confirmation of Operations

Refer to *SECTION 12 Tracing and Monitoring.*

1,2,3... 1. Traces the transmission lines.

Trace the data in the send and receive messages and the control signals that are flowing on the transmission line (RS-232C or RS-422A/485).

2. Monitors the I/O memory.

Monitor the send and the receive data and the status of flags.

1-11-2 For the C200HX/HG/HE

Procedure 1 PMSU Setup

DIP Switch Setup for the PMSU (For C200HW-COM06-E/EV1 only.)

SW1: Switch between two-wire and four-wire methods

SW2: ON/OFF of terminating resistance (ON during using RS-422A/485 ports)

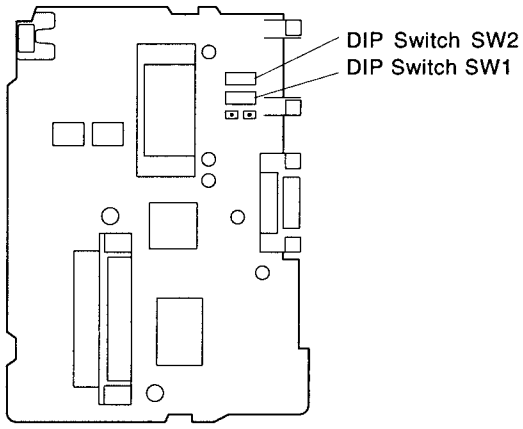

Procedure 2 PMSU Mounting

1,2,3... 1. Open the memory cassette cover.

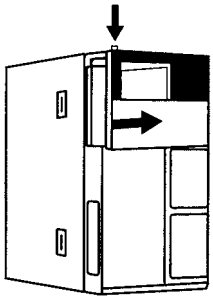

2. Remove the PMSU cover.

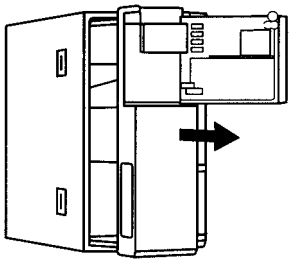

3. Insert the PMSU and slide it into the slit completely.

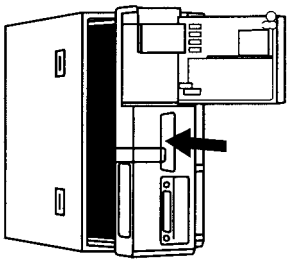

4. Close the memory cassette cover.

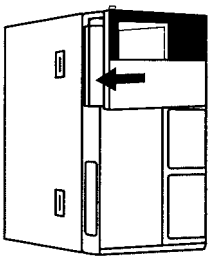

Procedure 3 Connection with External Devices

Connect through RS-232C or RS-422A/485.

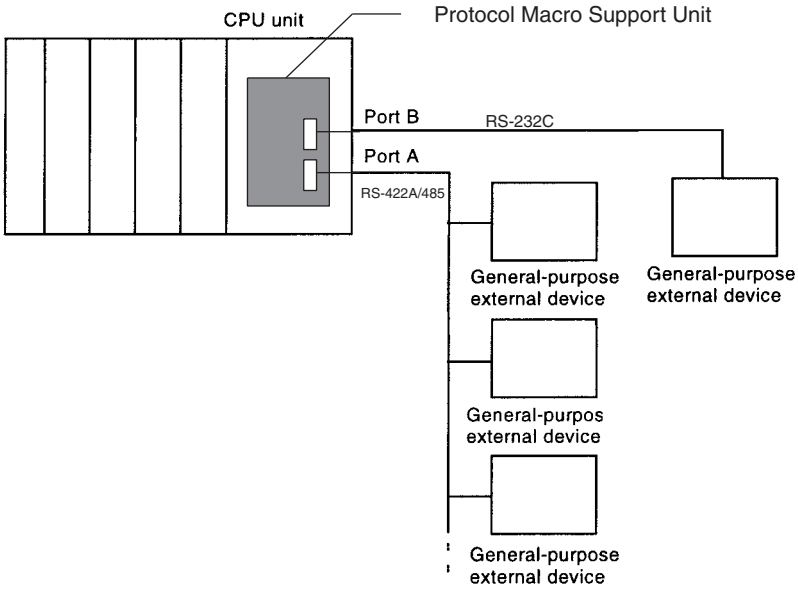

Note For connector pin arrangements and connection methods, refer to the *Communications Board Operation Manual (W304)* and other relevant manuals for general-purpose external devices.

Procedure 4 Initial Setting

1,2,3...

1. For Connecting Cables between the PLC and the CX-Protocol, refer to *1-4 System Configuration.*
2. PLC setup of the CPU Unit and the PMSU.

   PLC Setup for Connecting the PLC to the CX-Protocol.

   Perform the following setups (a) and (b). The communications conditions designated in (a) and (b) must be coherent.

   a) Using the CX-Protocol, designate a target PLC model and perform communications setup between the personal computer and the PLC.

   b) Using a Programming Device for PLC's CPU Unit, perform PLC setup according to a connected port.
      - When connected to the peripheral port:
        Communications setup of the peripheral port:
        DM 6650 to DM 6654 in the PLC setup area
      - When connected to the CPU Unit's built-in RS-232C port:
        Communications setup of the RS-232C port:
        DM 6645 to DM 6649 in the PLC setup area

   For both the peripheral port and the CPU Unit's built-in RS-232C port, make the default settings (start bit: 1 bit, data length: 7 bits, parity: even, stop bit: 2 bits, baud rate: 9600 bps) to correspond to 0000 in DM 6650 for the peripheral port and DM 6645 for the CPU Unit's built-in RS-232C port respectively.

   PLC Setup for the PMSU

   Use one of the following methods to perform PLC setup of the PMSU port A/B.

   c) Using a Programming Device for the PLC's CPU Unit, perform the following PLC setup.
      PMSU PLC setup
      Port A: DM 6555 to DM 6559 in the PLC setup area
      Port B: DM 6550 to DM 6554 in the PLC setup area

      Example: Setting the Default Communications Conditions

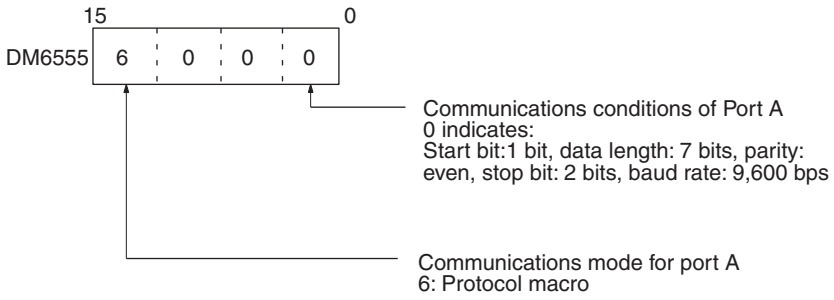

   d) Using the CX-Protocol, perform setup of communications port A/B through the **PMSU** Icon and transfer the setting to the PLC.
      For more information, refer to *10-7 Transfer of Communications Port Setting Data to PLC.*

3. Setup of external devices.

   Perform required processes including DIP switch settings on external devices.

Procedure 5 Protocol Design

Refer to *SECTION 4, SECTION 5, and SECTION 6.*

1,2,3...

1. Creates the status transition chart of communications sequence.
2. Disassembles the status transition chart into the sequences and steps and sets them up.
3. Creates the send and the receive messages.

Procedure 6 Project (Protocol Data) Creation and Transfer by CX-Protocol

Refer to *1-9 Overview of Project Creation*.

1,2,3...

1. Creates a new project.
   Refer to *5-1 Creating Projects and Protocols.*
2. Creates a new communications sequence.
   Refer to *5-2 Creating Sequences and Steps and 7-1 Setting Sequences.*
3. Creates each step.
   Refer to *5-2 Creating Sequences and Steps* and *8-1 Step Setting.*
4. Creates each message. (See note.)
   Refer to *9-1 Creating Messages.*
5. Transfers the created projects to the PMSU.
   Refer to *11-1 Transferring and Reading Protocol Data between the Computer and PMSU.*

   Note Each step can be created after each message creation (by designating the message name).

Procedure 7 The Ladder Program Creation

1,2,3...

1. Allocates function code for the PMCR instruction.
   1) Sets SW4 of the CPU Unit to ON (enables the application commands setup).
   2) Allocates function code for the PMCR instruction through a Programming Device for the CPU Unit.

   Note If your PLC is the C200H□-CPU□□-ZE, function code 260 will be assigned to the PMCR instruction by default.
2. Describes the PMCR instruction.
   Example:

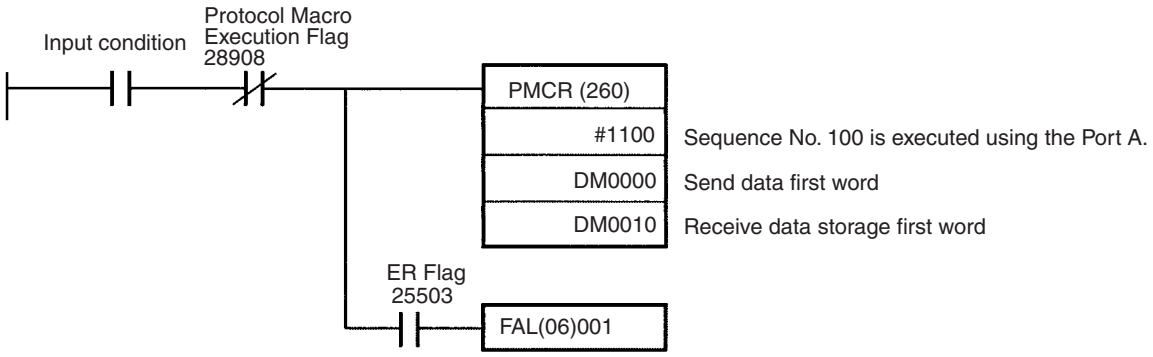

When the input condition is set to “ON” and the Protocol Macro Execution Flag (28908: port A) is set to “OFF,” the communications sequence No. 100 registered on the PMSU will be called to send and receive data via port A of the PMSU.

The send data will be sent out from the next DM 00001 according to the number of effective words (number of words including DM 0000) designated by DM 0000.

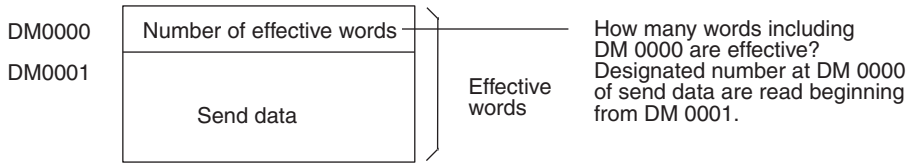

The receive data is stored in the successive words beginning from DM 0011 for the number of effective words actually stored in DM 0010 (number of words including DM 0010).

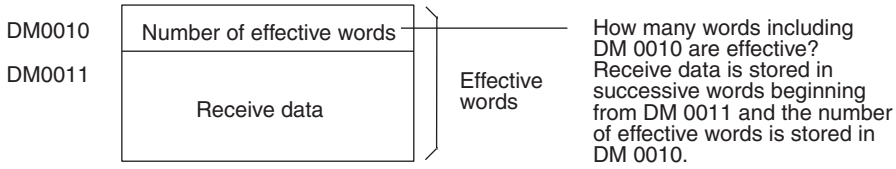

3. Execute the PMCR instruction.

Procedure 8 Confirmation of Operations

Refer to *SECTION 12 Tracing and Monitoring.*

1,2,3...

1. Traces the transmission lines.

   Trace the data in the send and the receive messages and the control signals flowing on the transmission line (RS-232C or RS-422A/485).

2. Monitors the I/O memory.

   Monitor the send and the receive data and the status of flags.

1-12 Specifications

1-12-1 Protocol Macro Specifications

Item		Description	
Number of protocols		20 max.	Can be created and registered by the CX-Protocol.
Number of sequences		1000 max.	
Per protocol	Sequence count	60 max.	
	Message count	300 max.	
	Matrix count	100 max.	
Number of steps per sequence		16 max.	
Sequence execution condition		Designated by the PMCR instruction on the PLC's CPU Unit (by giving a sequence number).	
Transmission mode		Half-duplex or full-duplex can be designated. (Full-duplex is only for the CS/CJ protocol macro.)	
Synchronization method		Start-stop synchronization (non-synchronization method)	

Item		Description	
Sequence content (common parameter to all steps)	Transmission control parameters	One of X-on/X-off flow or RTS/CTS flow, delimiter control, contention control, or modem control can be designated.	
	Response type	Mode for writing received data to the I/O memory area designated by the third operand (for C200HX/HG/HE) or fourth operand (for CS/CJ) of the PMCR instruction. Either the scan mode or interrupt mode can be designated.	
	Monitoring time for sending/ receiving	Receive wait, receive finish, or send finish can be monitored. Setup range: 0.01 to 0.99 s, 0.1 to 9.9 s, 1 to 99 s, or 1 to 99 minutes	
	Link word	Data are exchanged between the PLC's CPU Unit and the PMSU when the CPU Unit is doing a Peripheral service. Two areas for sending data, and two areas for receiving data.	
Step content	Command	Send, Receive, or Send&Receive, Wait, Flush, DTR-ON (Open), or DTR-OFF (Close) (Wait, Flush, DTR-ON, and DTR-OFF are only for the CS/CJ protocol macro.)	
	Repeat counter	1 to 255 times	
	Retry count	0 to 9 (Can be designated only for Send&Receive command.)	
	Send wait time	0.01 to 0.99 s, 0.1 to 9.9 s, 1 to 99 s, or 1 to 99 minutes (Can be designated only for Send or Send&Receive command.)	
	With/Without response writing (operand addressing)	Specifies whether to store the receive message after data receiving is completed (when storing received data to the area designated by the third operand (for C200HX/HG/HE) or fourth operand (for CS/CJ) of the PMCR instruction.)	
	Next process	Specifies the next process as follows when the step ends normally: End (end the sequence), Next (go to the next step number), Goto (go to a designated step number), or Abort (abort the step to end the sequence).	
	Error process	Specifies the next process as follows when the step ends abnormally: End (end the sequence), Next (go to the next step number), Goto (go to a designated step number), or Abort (abort the step to end the sequence).	
	Send message	Settings for the data to be sent when the command is Send or Send&Receive.	Consists of a header (Note 1), address (Note 2), length, data (Note 2), error check code (Note 3), and terminator (Note 1).
	Receive message	Settings for the data to be received when the command is Receive or Send&Receive.	
	Matrix	When the command is Receive or Send&Receive, the matrix sets up the message expected to be received (up to 15 sets) to switch next process by comparing the data.	Designate a receive message and next process for each of case numbers 00 to 15. At least one of 16 cases must be designated to Other for its receive message type (other than the designated receive message).
	Data attribute of header and terminator	Constant	ASCII data, hexadecimal data, or control code.

Item		Description					
Step content	Address attributes and data attributes in send or receive message	Constant	ASCII data, hexadecimal data, or control code (For address, the control code cannot be used.)				
		Variable	No conversion, hexadecimal to ASCII conversion, or ASCII to hexadecimal conversion (Direction of read / write can be designated.)				
			Specification method	(X,Y) X: Effective address (source or destination address) Y: Data size (1 to 1,000 for CS/CJ and 1 to 255 for C200HX/HG/HE) (Data size is equal to the number of bites on transmission path.)			
			X	Word designation	Word read (I/O memory → send data)	Designated by the second operand (for C200HX/HG/HE) or the third operand (for CS/CJ) of the PMCR instruction	Designated start address + n (The linear expression aN+b, which includes the repeat counter N, can be designated for n.)
						Designated by the link word.	
						Designated directly.	
					Word write (receive data → I/O memory)	Designated by the third operand (for C200HX/HG/HE) or the fourth operand (for CS/CJ) of the PMCR instruction.	
						Designated by the link word.	
						Designated directly.	
				Wildcard	*	Receive any data/address (only for receive message)	
				Linear expression or constant including the repeat counter	aN+b	a: 0 to 255 (for C200HX/HG/HE) or 0 to 1,000 (for CS/CJ) b: 1 to 255 (for C200HX/HG/HE) or 1 to 1,000 (for CS/CJ) N: Repeat counter value	

<table>
<tr><th colspan="2">Item</th><th colspan="6">Description</th></tr>
<tr><td rowspan="6">Step content</td><td rowspan="5">Address attributes and data attributes in send or receive message</td><td rowspan="5">Variable</td><td rowspan="5">Y</td><td>Linear expression or constant including the repeat counter</td><td>aN+b</td><td colspan="2">a: 0 to 255 (for C200HX/HG/HE) or 0 to 1,000 (for CS/CJ)
b: 1 to 255 (for C200HX/HG/HE) or 1 to 1,000 (for CS/CJ)
N: Repeat counter value</td></tr>
<tr><td>Wildcard</td><td>*</td><td colspan="2">Receive any length of data.</td></tr>
<tr><td rowspan="3">Word designation</td><td rowspan="3">Word read (I/O memory → send data)</td><td>Designated by the second operand (for C200HX/HG/HE) or the third operand (for CS/CJ) of the PMCR instruction</td><td rowspan="3">Designated start address + n (The linear expression aN + b, which includes the repeat counter N, can be designated for n.)</td></tr>
<tr><td>Designated by the link word.</td></tr>
<tr><td>Designated directly.</td></tr>
<tr><td>Error check code</td><td colspan="6">Supports calculation of LRC, LRC2, CRC-CCITT, CRC-16, SUM, SUM1, and SUM2.
(LRC2 and SUM1 are only for the CS/CJ protocol macro.)</td></tr>
<tr><td>The maximum length of the send or the receive message</td><td colspan="6">CS/CJ: 1,000 bytes (possible to set to a range between 200 and 1000 bytes)
Also possible to set to this range at a control of RTS/CTS flow, X-on/X-off flow, or delimiter.
C200HX/HG/HE: 256 bytes (Within 200 bytes of one-step receiving message at a control of RTS/CTS flow, X-on/X-off flow, or delimiter.)</td></tr>
<tr><td colspan="2">Trace function</td><td colspan="6">Possible to trace chronological data of send/receive messages.
CS/CJ: Data length that can be traced is 1,700 bytes (characters).
C200HX/HG/HE: Data length that can be traced is 670 bytes (characters).
Possible to trace changes in the control signals such as step number, RTS, or CTS.</td></tr>
</table>

1-12-2 Specifications of the CX-Protocol

The following conditions are for when installing the CX-Protocol as an individual application. Different conditions will apply when installing the CX-Protocol as one of the features of the CX-One FA Integrated Tool Package. Refer to the *CX-One Setup Manual* (W463) for the specific conditions.

Item	Description		
Basic functions	Creation of protocols, transfer of protocols to and from the PMSU, and file saving		
File creation unit	Project unit		
	Components of project	Protocol list	Up to 20 protocols (components of protocol: sequence, send/receive message, matrix)
		Devices	Target PLC, network setup, communications port setup
		Trace list	
Other functions	- Tracing of transmission lines - Monitoring of PLC's I/O memory - Print of protocols - Standard system protocols are built-in. - Error display		
Supported network	Host link (SYSMAC WAY), Tool Bus, Controller Link, SYSMAC LINK, Ethernet, and USB		
Connection with PLCs	Peripheral port, built-in RS-232C port, or USB port on the CPU Unit; RS-232C port on the PMSU (only in the host link mode); or a Network Support Board for the above networks		

1-13 Differences between Protocol Macros

The protocol macro for the CS/CJ is different from the one for the C200HX/HG/HE as shown in the following table.

Item		C200HX/HG/HE	CS/CJ
Transmission mode		Half-duplex	Half-duplex or full-duplex
Commands		Send, Receive, and Send&Receive	Send, Receive, Send&Receive, Wait, Flush, DTR-ON (Open), and DTR-OFF (Close)
			Notes Wait: Keeps the step on standby and controls the next process. Flush: Clears all data in the receive buffer. Open (DTR-ON): Holds the DTR signal even after the sequences has ended (only under modem control). Close (DTR-OFF): Turns OFF the DTR signal under the modem control.
Receive buffer (per port)		256 bytes	2.5 Kbytes
Receive buffer flow control (RTS/CTS, Xon/Xoff) on PMSU side	Starting point (send stop request to the destination device: RTS signal OFF)	200 bytes	2 Kbytes

Item				C200HX/HG/HE	CS/CJ
	Ending point (send resumption request to the destination device: RTS signal ON)			When shifting steps	0.5 Kbytes
Maximum send/receive message length	Number of bytes that can be sent for one Send processing			256 bytes max.	1,000 bytes max. Default: 200 bytes Possible to set between 200 and 1,000 bytes. **Note** When receiving data, data within the receive buffer will be retrieved for each maximum length.
	Number of bytes that can be received for one Receive processing	RTS/CTS flow, Xon/Xoff flow, delimiter control		200 bytes max.	
		Others		256 bytes max.	
Maximum receive message length when a wildcard (*) is used for data length	RTS/CTS flow, Xon/Xoff flow, delimiter control			200 bytes max.	As shown above. Possible to set between 200 and 1,000 bytes. Default: 200 bytes
	Others			256 bytes max.	
Designation of send/receive data storage location	When operand is designated	Maximum send data		127 words max. (Not including the send data word area)	250 words max. (Including the send data word area)
		Maximum receive data		127 words max. (Not including the receive data word area)	250 words max. (Including the receive data word area)
Data capacity	When link word is designated	Area 1	IN	Total of 128 words max.	Total of 500 words max.
			OUT		
		Area 2	IN		
			OUT		
	Direct designation (by each parameter)	Maximum send or receive data		128 words max. (No conversion)	500 words max. (No conversion)
Receive buffer clearing timing		Half-duplex		1) Right before sequence is executed. 2) Right before Receive processing is executed.	1) Right before sequence is executed. 2) Right before Send processing is executed. 3) When Flush command is executed.
		Full-duplex		Not available.	1) Right before sequence is executed. 2) When Flush command is executed.
Receive processing to the receive buffer		Half-duplex		Only while Receive processing is being executed.	Any time other than when Send processing is being executed.
		Full-duplex		Not available.	Every time the sequence is executed. (No receive processing if sequence is not executed.)
Character trace receive record		Half-duplex		Every time the sequence is executed. (Also recorded while Send processing is being executed.)	Every time the sequence is executed. (Also recorded while Send processing is being executed.) Execution sequence number communications error.
		Full-duplex		Not available.	

Item		C200HX/HG/HE	CS/CJ
Transmission control signal operation	RTS signal	When RTS/CTS flow control is designated: RTS signal turns ON when the receive buffer on the PMSU side reaches 200 bytes. When modem control is designated: Turns ON when data is sent and turns OFF when transmission is completed.	When RTS/CTS flow control is designated: RTS signal turns ON when the receive buffer on the PMSU side reaches approx. 2 Kbytes. When modem control is designated: Turns ON when data is sent and turns OFF when transmission is completed.
	CTS signal	When RTS/CTS flow control is designated: transmission is kept standby when CTS signal is ON and transmission becomes possible when CTS signal is OFF.	When RTS/CTS flow control is designated: transmission is kept on standby when CTS signal is ON and transmission becomes possible when CTS signal is OFF.
	DTR signal	When modem control is designated: Turns ON when sequence execution is started and turns OFF when sequence execution is completed. **Note** Does not turn ON in modes other than the modem control.	When modem control is designated: Turns ON when sequence execution is started and turns OFF when sequence execution is completed. Under the modem control, ON/OFF can be controlled at any desired timing by executing the Open (DTR-ON state is retained even after sequence is completed) or Close (DTR-OFF) command. DTR signal can be controlled over more than one sequence.
		Note When both the RTS/CTS flow control and modem control are designated: The DTR signal will follow the modem control and RTS/CTS signal will turn ON the RTS signal when sending data and will follow the RTS/CTS flow control when receiving data.	
Synchronization with the CPU Unit after sequence is executed.		Not available.	Keeps transition between steps on standby using the Wait command and starts control when the Wait is cleared from the CPU Unit. Example: Processing can proceed to the next step after the CPU Unit completes internal computation in a particular step.
Send/receive messages	Receiving data length	No check.	Data is retrieved as a message for the length indicated in the expected receive message.
	Error check code	LRC2 and SUM1: Not available.	LRC2 and SUM1: Available
Interrupt notification function		Not available.	Serial Communications Board: Available. Serial Communications Unit: Not available.

SECTION 2
Installing/Uninstalling/Starting/Ending

This section outlines the functions of the CX-Protocol and describes the operating environment, installation procedure, and the setting of the usage environment.

2-1 Connecting to a PLC 42
2-2 Installing and Uninstalling the Software 45
2-3 Startup 45
2-4 Shutdown 46
2-5 Outline of User Interface 46
2-5-1 Window 48
2-5-2 Control Menu 51
2-5-3 Menu and Short-cut Keys 52
2-5-4 Pop-up Menus 53
2-5-5 Tool Bar Icons 55
2-5-6 Status Bar 56

2-1 Connecting to a PLC

When transferring protocol data created by the CX-Protocol to Communications Boards or Units, use the following Cables to connect the computer and PLC. Connection to the CPU Unit can be made to either the peripheral port or RS-232C port of the CPU Unit.

Note A personal computer can be connected to the PMSU port if the port is set to the host link mode. With the C200HX/HG/HE, if one of the PMSU ports is set to the NT link mode, this connection will not be possible.

CJ2

Port at Unit	Port at computer	Network type (communications mode)	Model	Length	Remarks
Peripheral (USB) port (Conforms to USB 2.0, B connector)	USB port	12 Mbps, USB 2.0	Commercially available USB cable (A connector- B connector)	5 m max.	---
Serial port (RS-232C) (D-sub, 9-pin, female)	D-sub, 9-pin, male	Serial communications	XW2Z-200S-CV	2 m	Use a static-resistant connector.
			XW2Z-500S-CV	5 m	
Built-in Ether-Net/IP port (see note)	Ethernet port	100Base-TX or 10Base-T	Commercially available twisted-pair cable	100 m (Recommended between hub and nodes.)	---
			Commercially available switching hub	---	

Note CJ2H-CPU□-EIP and CJ2M-CPU3□ only.

Peripheral (USB) port

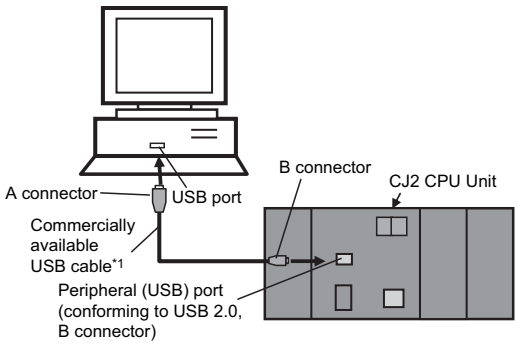

*1 Commercially available USB cable: 5 m max., for USB 1.1 or 2.0.

Serial port (RS-232C)

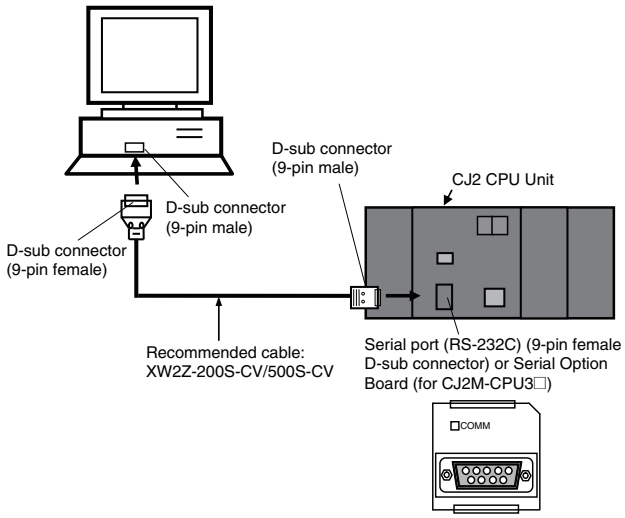

Built-in EtherNet/IP port

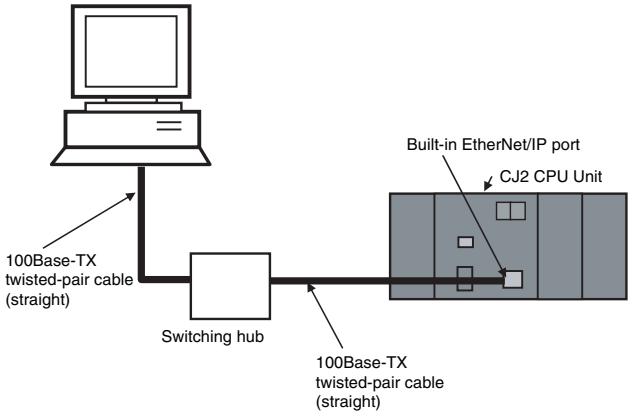

CS/CJ

Communications procedure	Cable used	Cable length	Connector on the computer	Connector on the PLC
Peripheral bus	CS1W-CN118 (see note)	0.1 m	RS-232C	Peripheral port
	CS1W-CN226	2 m		
	CS1W-CN626	6 m		
	XW2Z-200S-V	2 m		CPU Unit built-in RS-232C port
	XW2Z-500S-V	5 m		

Note The CS1W-CN118 is used when connecting an RS-232C cable to the peripheral port.

Connecting the CPU Unit to the peripheral port

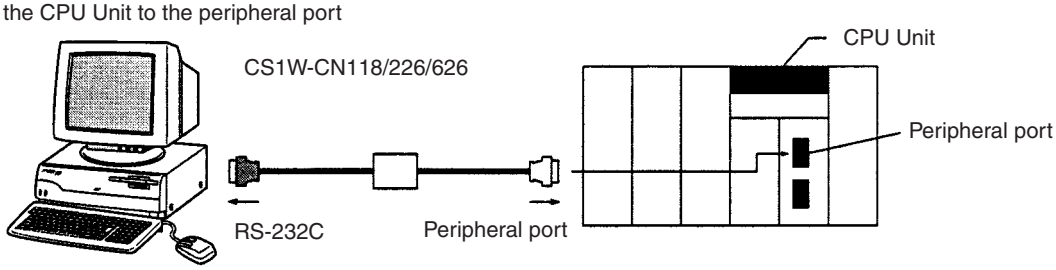

Connecting the CPU Unit to the RS-232C port

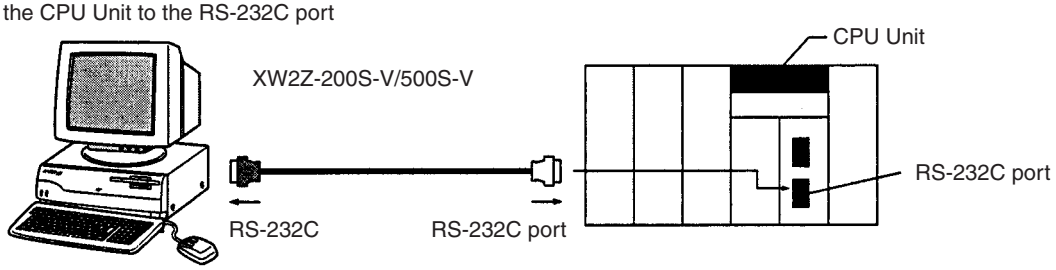

CP Series

Computer	Computer port	CPU Unit port	Cable length	Cable
IBM PC/AT or compatible	USB port (A-type connector)	USB port (B-type connector	5 m max.	Commercially available USB 1.1 or 2.0 cable

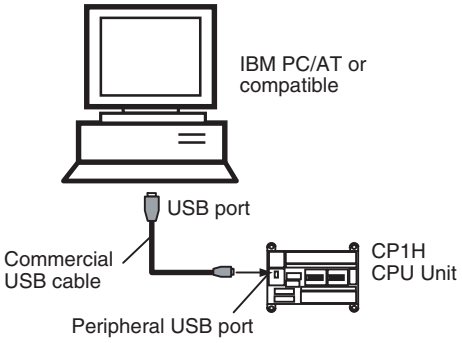

Note If an RS-232C Option Board (CP1W-CIF01) is mounted, it is also possible to use a XW2Z-200S/500S-V/-CV RS-232C Cable to connect an RS-232C port on the computer to the RS-232C Option Board.

C200HX/HG/HE

Communications procedure	Cable used	Cable length	Connector on the computer	Connector on the PLC
Peripheral bus	CQM1-CIF02	3.3 m	RS-232C	Peripheral port
RS-232C	XW2Z-200S-V	2.0 m		RS-232C
	XW2Z-500S-V	5.0 m		

Connecting the CPU Unit to the peripheral port

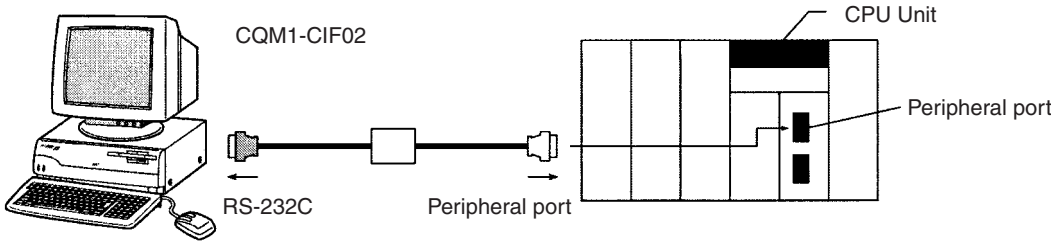

Connecting the CPU Unit to the RS-232C port

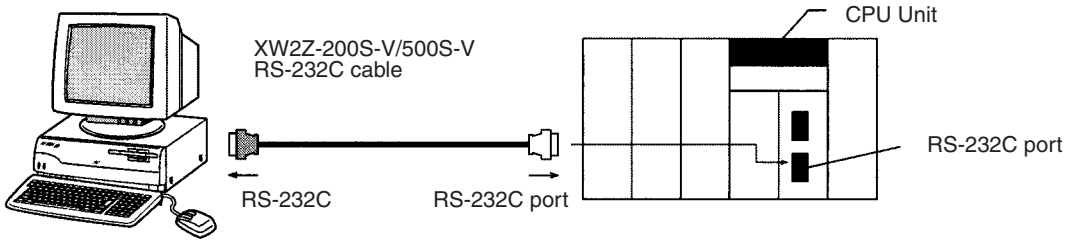

When creating a specific RS-232C cable, join the connectors listed in the following table.

Connectors and Cables

Component name	Model	Manufacturer
D-sub connector (9-pin, PLC side, male)	XM2A-0901 (connector)	OMRON
	XM2S-0911 (connector hood)	
D-sub connector (9-pin, PC side, female)	XM2D-0901 (connector)	OMRON
	XM2S-0911 (connector hood)	
Recommended Cable	UL2464 AWG28×5P IFS RVV SB (UL item)	Fujikura Ltd.
	AWG28P × 5P IFVV-SB (non-UL item)	
	UL2464-SB 5P × AWG28 (UL item)	Hitachi Cable, Ltd.
	CO-MA-VV-SB 5P × AWG28 (non-UL item)	
Wire path length	Up to 15 m	

Connection Signals on the Personal Computer Side

Pin number	Symbol	Circuit name
1	FG	Protective Ground
2	RD	Receive Data
3	SD	Send Data
7	RTS	Request To Send
8	CTS	Clear To Send
5	SG	Signal Ground

Wiring Cables

The following diagram shows the wiring of cables connecting a PLC and computer.

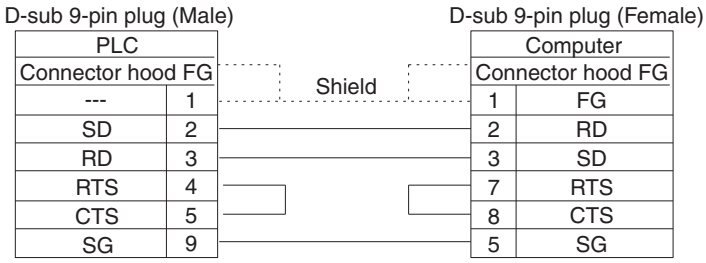

2-2 Installing and Uninstalling the Software

The CX-Protocol is installed from the CX-One Installer. For details, refer to the *CX-One Setup Manual* (Cat. No. W463), which is provided with the CX-One.

2-3 Startup

Use the following procedure to start the CX-Protocol.

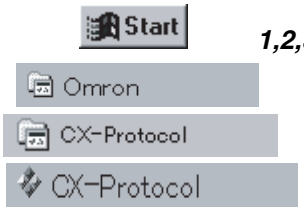

1,2,3...

1. Left-click the **Start** Button on the taskbar and select **Programs**.
2. Select the **Omron** folder.
3. Select the **CX-Protocol** folder.
4. Left-click the **CX-Protocol** program to start the CX-Protocol. When the CX-Protocol is started, the standard system protocol will be displayed.

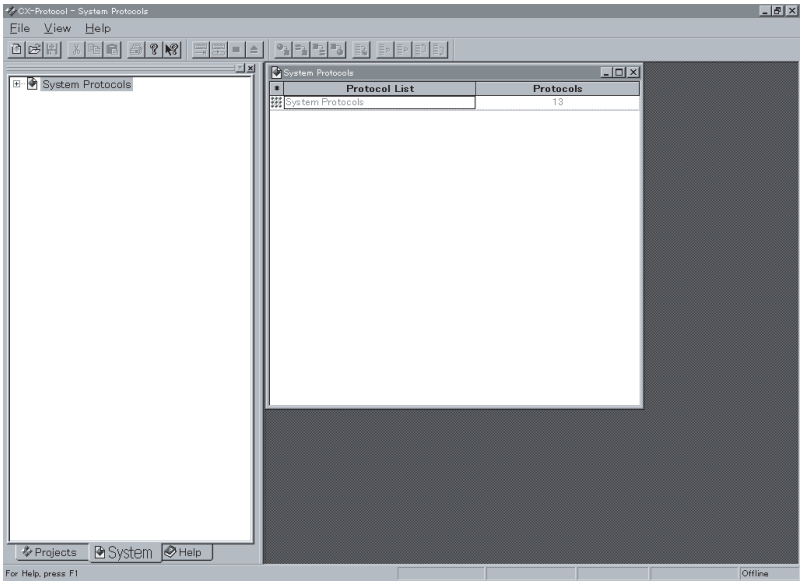

The CX-Protocol can be started also by right-clicking a Serial Communications Board/Unit in the I/O Table Window opened from the CX-Programmer and selecting ***Start Special Application*** from the pop-up menu.

In this case, if ***Start Special Application - Start Only*** is selected, the CX-Protocol will be started in the same manner as when started from the Windows Start Menu (i.e., no new project will be created).

If ***Start Special Application - Start with Setting Inherited*** is selected, the CX-Protocol will be started with a new project that inherits the Device Type and online/offline status from the CX-Programmer.

2-4 Shutdown

Use one of the following methods to shut down the CX-Protocol.

Select the **Control Menu** on the title bar and left-click the **Close** Button.

Select the **File** Menu and left-click the **Exit** in the menu.

Left-click the **Close** Button on the title bar.

Press the **Alt+F4** Keys.

A confirmation dialog box will be displayed if any data currently opened in the CX-Protocol has not been saved.

Left-click the **Yes** Button to save the changes. Left-click the **No** Button to discard the changes. The CX-Protocol will close. Left-click the **Cancel** Button to abort the operation and return to the CX-Protocol.

2-5 Outline of User Interface

The following is the basic screen configuration of the CX-Protocol. The standard system protocol screen that is displayed upon startup is always displayed in the **Project Window**.

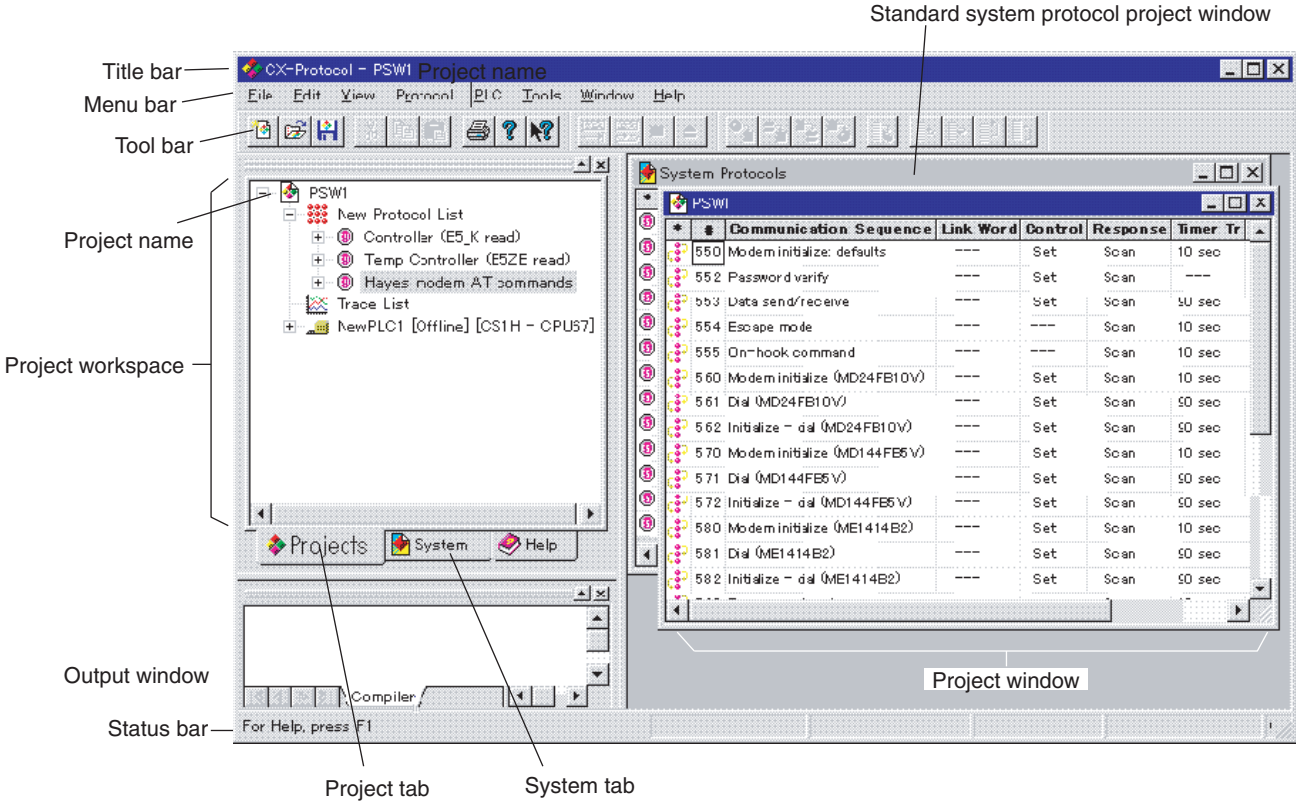

Project Window:	The contents of the data highlighted in the project workspace is displayed. By double-clicking the icon on the left edge of the screen, the contents of the data are displayed as a hierarchy from the highest level to the lowest level scrolled.
Project Workspace:	The hierarchy is displayed with the **Project** as the highest level. The contents of the highlighted data will be displayed in the project window.
Output Window:	Errors or warnings that occur while compiling data that have been sent to the PMSUs connected online are displayed.
System Tab:	Left-click the tab to make active the project window of the standard system protocol.
Project Tab:	Left-click the tab to make active the project window of the project created by users.

The screen consists of three panes.

- The data hierarchy is displayed in the left pane in a tree format. The left pane is called the **Project Workspace**.
- The contents of designated data (i.e., highlighted data) in the project workspace will be displayed in a table format in the right screen portion. The right pane is called the **Project Window**.

The menu and tool bars are used for basic Windows functions such as file and edit functions as well as protocol and trace operating functions.

When the CX-Protocol is started, the standard system protocol will be displayed on the screen. When a new protocol is created or when an existing project file is opened, the project window will be displayed on top of the screen. This becomes the active window.

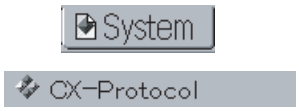

To switch between the standard system protocol project workspace and the user's project workspace, either left-click the **System** Tab or **Project** Tab or directly click the project window.

The following are the basic operations required to create, edit, and download protocols.

- Double-click the icon on the project workspace or project window to shift from the highest level to the lowest level. Press the **Esc** Key to shift from the lowest to the highest level.
- To create a new object such as a protocol, sequence, step, or message, right-click to display the pop-up menu and select **Create**. A new object will be displayed in the project window.
- To input data into the list in the project window, left-click the cell (input field) or click the **Down-arrow** Icon to display the settings dialog box and input set values into the dialog box.
- The pop-up menu is used for setting the communications port of the PMSU, uploading protocols, tracing data, or downloading trace data. Right-click or press the **Shift+F10** Keys to display the pop-up menu.

Note The pop-up menu that is displayed when the right mouse button is clicked is a useful feature of the CX-Protocol. Different pop-up menus will be displayed depending on where the right button is clicked. These pop-up menus are efficient because they include almost all the main functions such as: creating new protocols, sequences, messages, matrices, and matrix cases, setting the communications port of the PMSU, uploading protocols, and tracing data.

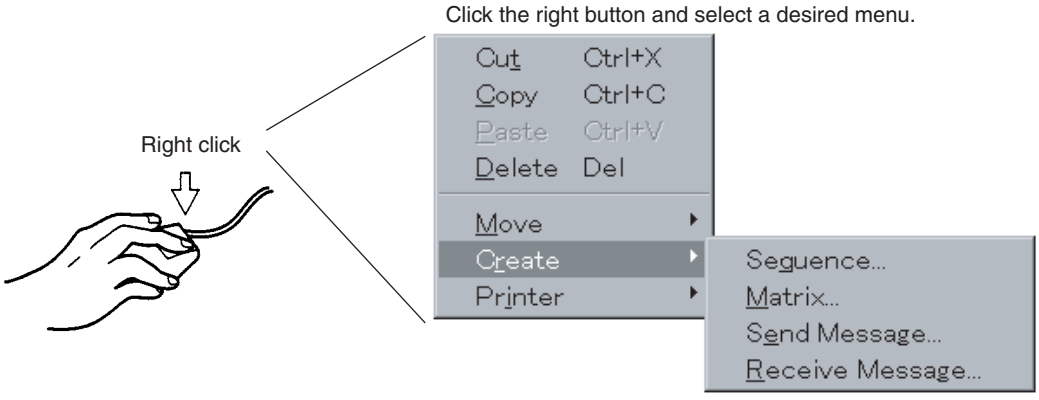

2-5-1 Window

Project Workspace Data will be displayed in the following hierarchy.

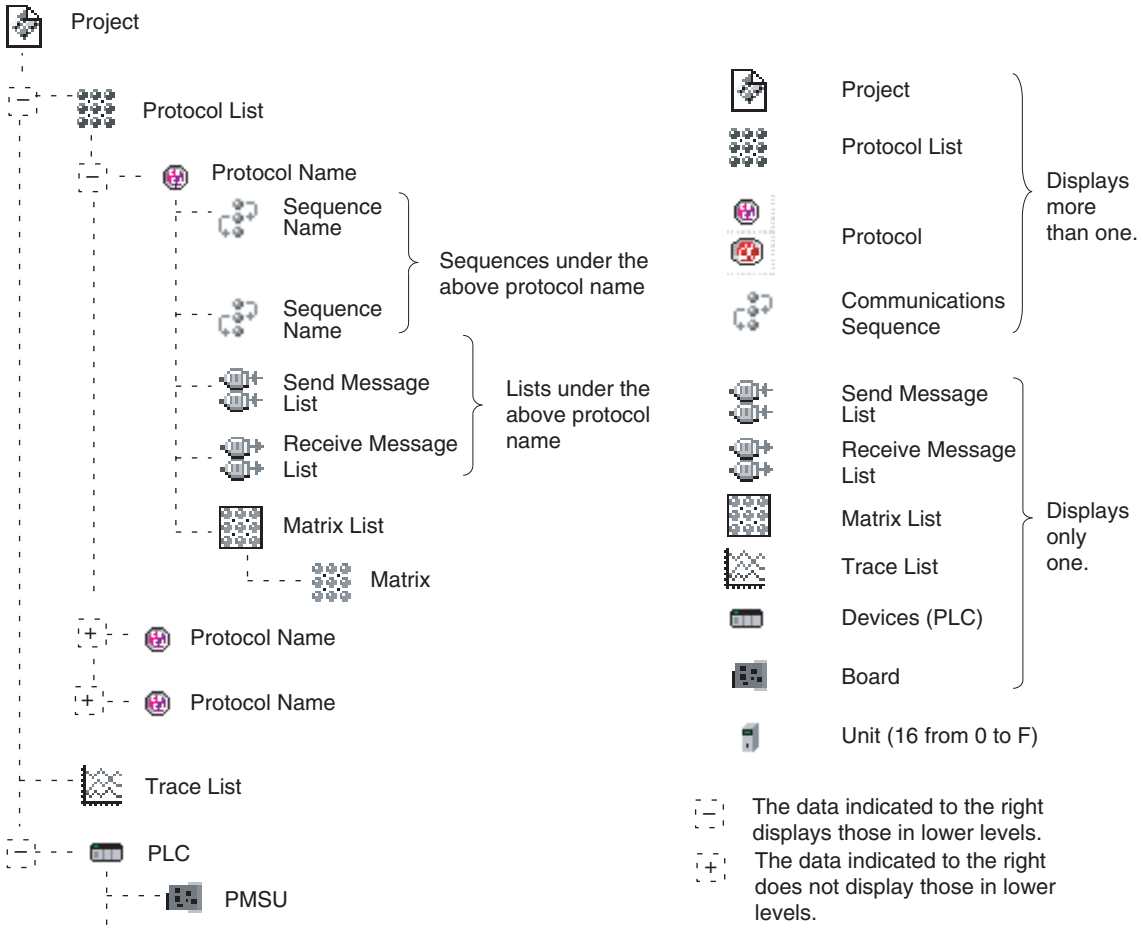

Project Window

The following items will be displayed depending on selected data items (i.e., the highlighted data) in the project workspace.

Selected data in the project workspace		Item in the project window										
	Project	*	Name	Protocol List Name	Number of Protocols	Trace List	Number of Traces	PLC	Name	Series	Model	--- ---
	Protocol List	*	Protocol Name	Sequence Start Number	Sequence End Number	Type	Target	---	---	---	---	---
	Protocol Name	*	# (Sequence Number)	Communications Sequence	Link Word	Transmission Control	Response Type	Timer Tr	Timer Tfr	Timer Tfs	---	---
	Sequence Name	*	Step	Repeat Counter	Command	Retry Count	Send Wait Time	Send Message	Receive Message	Response	Next	Error
	Send Message List	*	Message Name	Header <h>	Terminator <t>	Check Code <c>	Length <l>	Address <a>	Data	---	---	---
	Receive Message List	*	Message Name	Header <h>	Terminator <t>	Check Code <c>	Length <l>	Address <a>	Data	---	---	---
	Matrix List	*	Matrix Name	Number of Cases	---	---	---	---	---	---	---	---
	Matrix	*	Case Number	Receive Message	Next Process	---	---	---	---	---	---	---
	Trace List	*	Description	Uploaded	Size	---	---	---	---	---	---	---
	PLC	*	Inner Board	Type	Serial Communications Unit	Type	---	---	---	---	---	---
	Board	*	PMSU Trace	Status	Communications Port	Type	---	---	---	---	---	---
	Unit	*	PMSU Trace	Status	Communications Port	Type	---	---	---	---	---	---

The highlighting cursor is available in both the project workspace and the project window.

The focused portion (i.e., the portion actually selected in operation) is surrounded by a dotted line. If a line in the project window is selected, the focused portion will be in the project window.

To switch over the focus between these two windows, press the **Tab** Key or select **Swap Focus** from the **View** Menu or left-click either of the screens.

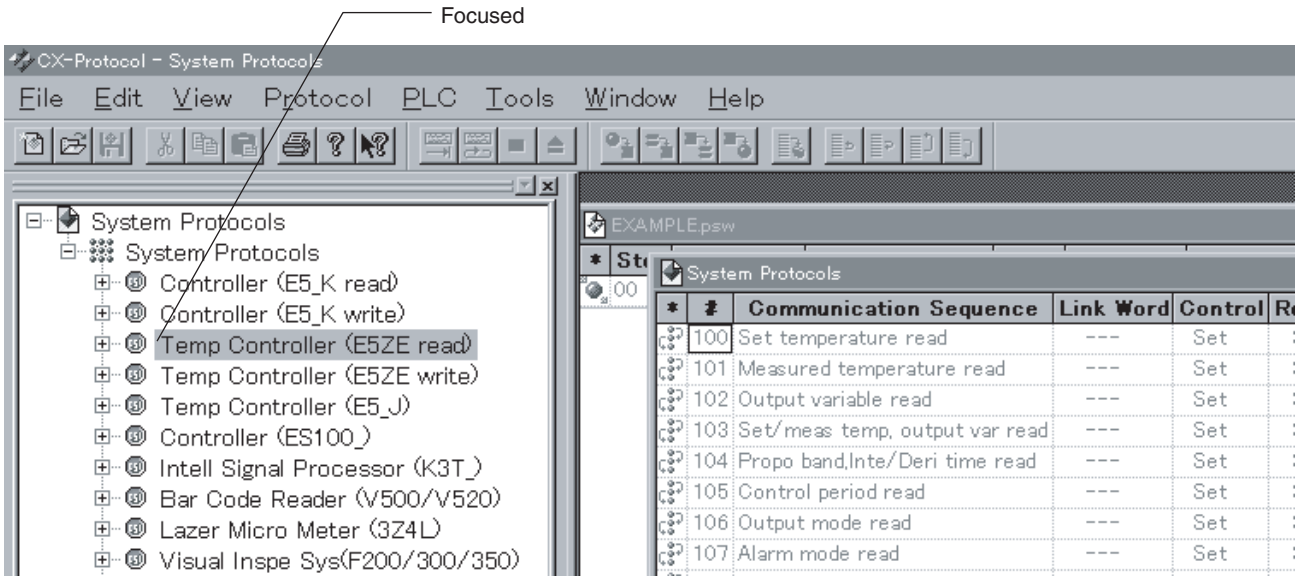

Selecting Elements in Projects

Use the mouse, **Up**, **Down**, **Left**, or **Right** Key, or **Function** Key to select the elements in projects.

The following operations are available without the mouse.

- Use the **Up** or **Down** Key while the focus is in either of the screens.
  To scroll up or down on the tree in the project workspace.
  To scroll up or down the rows of the tables in the project window.
- Press the **Esc** Key or the **Backspace** Key to shift to the next higher level.
- Press the **Page Up** or **Page Down** Key to scroll up or down by a whole screen in the project window.
- Press the **Ctrl+F6** Keys or select **Next** from the **Control** Menu to move to the next active window of the CX-Protocol.
- The size ratio of the project workspace to the project window will automatically be adjusted when displayed.
- The width of each item in the project window will automatically be adjusted when displayed.
- Click the + or − portion to select the hierarchy in the project workspace. After the + portion is clicked, the − portion will be displayed at the final hierarchy level, in which case only the display of the project workspace will change while the display of the project window will not change.

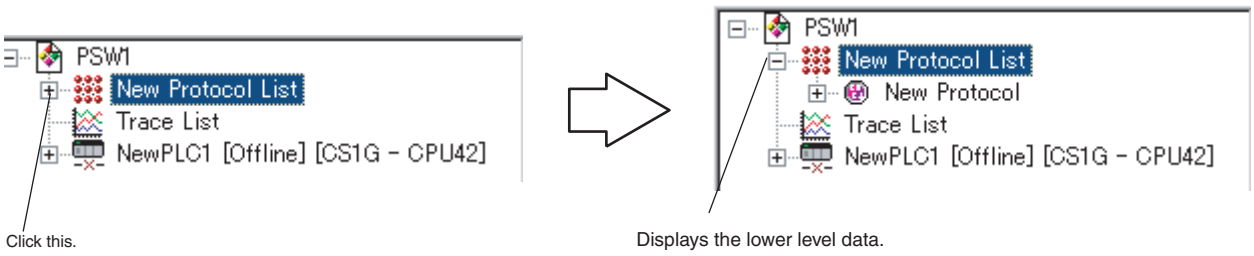

Scrolling the Hierarchy

Double-click or press the **Right** Key while the focus is in the project workspace to scroll down the hierarchy. The selected and highlighted data in the project workspace will shift down.
Press the **Esc** Key or select **Parent** in the **View** Menu to move up in the hierarchy.

Pop-up Menu

Click the right mouse button to display the pop-up menu.

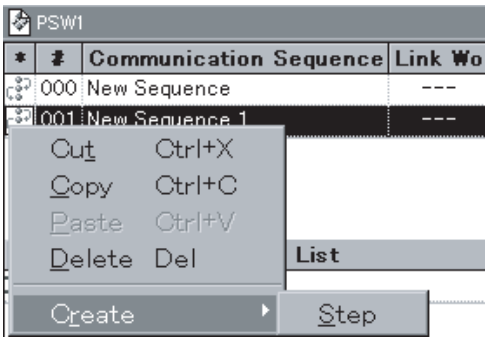

A new step is created after clicking the right mouse button or pressing the **Shift+F10** Keys to select the corresponding item in the popup menu. In this example, **Create/Step** is selected.

Data Input

Left-click each item in the table within the project window, or left-click and then either left-click the **Enter** Button or press the **Enter** Key to input data of each item displayed in the dialog box.

Either click the **Enter** button or press the **Enter** Key.

2-5-2 Control Menu

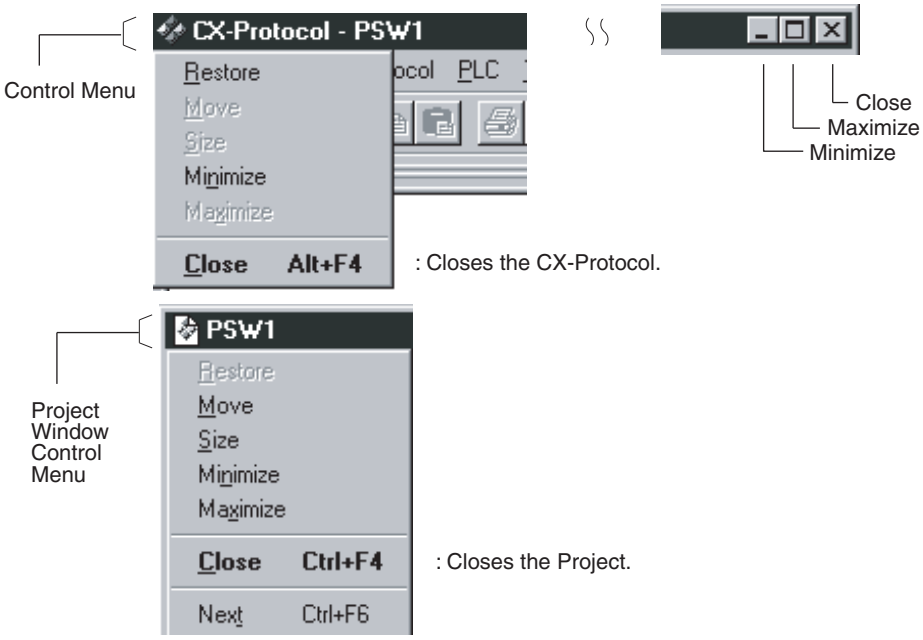

2-5-3 Menu and Short-cut Keys

Main menu	Submenu	Description	Short-cut key	Icon on tool bar
File	**New**	Creates a new project.	Ctrl+N	Yes
	Open...	Opens the existing project selected.	Ctrl+O	Yes
	Close	Closes the project worked on.	---	---
	Save	Overwrites and saves the project file worked on.	Ctrl+S	Yes
	Save As...	Saves the project file worked on as a new file.	---	---
	Print...	Prints the protocols or trace selected.	Ctrl+P	Yes
	Print Preview	Displays the image of print output.	---	---
	Print Setup...	Sets the printer model, paper size, and printing direction.	---	---
	Recent File (1,2,3,4)	Displays a maximum of four files recently used.	---	---
	Exit	Exits CX-Protocol.	---	---
Edit	**Cut**	Cuts and transfers the range designated to the clipboard.	Ctrl+X	Yes
	Copy	Copies and transfers the range designated to the clipboard.	Ctrl+C	Yes
	Paste	Pastes the contents of the clipboard to the position designated.	Ctrl+V	Yes
	Delete	Deletes the range designated.	Del	Yes
	Move	Scrolls the steps or matrix case upwards or downwards to the top or bottom.	---	Yes
View	**Toolbar**	Shows or hides the project tool bar.	---	---
	Status Bar	Shows or hides the status bar.	---	---
	Project Workspace	Moves the cursor to the project workspace.	---	---
	Output	Moves the cursor to the output window.	---	---
	Parent	Scrolls the displayed hierarchy portion in the project window to the one upper.	Esc	---
	Swap Focus	Switches over the focus among the project workspace, project window, and output window.	Tab	---
Protocol	**Create**	Selected when newly creating a protocol list, protocol, sequence, step, message matrix, matrix case.	---	---
	Upload Protocol List	Displays the name list of protocols in Boards or Units.	---	---
	Upload Protocols	Transfers the protocol of the Board or Unit to the project.	---	Yes
	Download Protocols...	Transfers the protocol created in the project to the Board or Unit.	---	Yes
	Compare Protocols...	Compares the protocols in the project with those in a Board or Unit.	---	Yes

Main menu	Submenu	Description	Short-cut key	Icon on tool bar
PLC	**Connect to PLC**	Connects the PLC to online.	---	---
	Operating Mode	Switches among the PLC operation modes.	---	---
	Edit PC-PLC Comms Settings...	Sets the PLC model and communications specifications between the PLC and computer.	---	---
	Edit Communications Port Settings...	Sets the communications specifications of the communications port of the Board or Unit.	---	---
	Upload Communications Port Settings	Uploads the communications port settings of the Board or Unit.	---	Yes
	Download Communications Port Settings	Downloads the communications port settings of the Board or Unit to the PLC.	---	Yes
	Start Trace	Selected when executing the continuous tracing or one-shot tracing.	---	Yes
	Stop Trace	Selected when stopping the continuous tracing or one-shot tracing.	---	Yes
	Upload Trace	Uploads the results of continuous tracing or one-shot tracing to the project.	---	Yes
	IO Table (See note.)	Sets or edits the I/O table.	---	---
	Memory (See note.)	Monitors or edits the contents of I/O memory area of the PLC.	---	---
	Error Log (See note.)	Displays the error contents and history of the PLC (CPU Unit).	---	---
Tools	**CX-Net**	Used for specifying the settings required for network communications such as the routing table or data link.	---	---
	Customize...	Customizes the tool bars or commands.	---	---
Window	**New Window**	Creates an identical new window.	---	---
	Cascade	Shows windows in cascade status.	---	---
	Tile	Shows windows laid vertically.	---	---
	Arrange Icons	Aligns icons to with one another.	---	---
	Currently Open Windows (1,2,3, ...)	Makes the selected window active.	---	---
Help	**Help Topics**	Shows the search topic in CX-Protocol's Help.	---	---
	About CX-Protocol...	Shows the version of CX-Protocol.	---	Yes

Note Disabled for an NJ-series CPU Unit.

2-5-4 Pop-up Menus

When one of the following objects is selected, right-click or press the **Shift+F10** Keys, and a pop-up menu will be displayed according to the hierarchy.

Pop-up Edit Menus

Selected object	Pop-up menu or submenu
Project	Create (Protocol List)
	Close
	Save
	Save as
	Properties

Selected object	Pop-up menu or submenu
Protocol List	Cut
	Copy
	Paste
	Delete
	Create (Protocol)
	Print
Protocol	Cut
	Copy
	Paste
	Delete
	Create (Sequence, Matrix, Send message, Receive message)
	Print (Print, Print preview, Printer settings)
Communication Sequence	Cut
	Copy
	Paste
	Delete
	Create (Step)
Step	Cut
	Copy
	Paste
	Delete
	Move (Top, Bottom, One up, One down)
Send Message List	Copy
	Paste
	Create (Send Message)
Receive Message List	Copy
	Paste
	Create (Receive Message)
Matrix List	Cut
	Paste
	Create (Matrix)
Matrix	Cut
	Copy
	Paste
	Delete
	Create (Matrix case)
Case	Cut
	Copy
	Paste
	Delete
	Move (Top, One up, One down)
Trace	Delete

Pop-up Operation Menus (in Online Operation)

Selected object	Pop-up Edit menu
PMSU icon	Upload Communications Port Settings
	Download Communications Port Settings
	Upload Protocol List
	Upload Protocols
Trace 1(A)/2(B)	Start Trace (Continuous Trace, One-shot Trace)
	Stop Trace
	Upload Trace
Communications Port 1(A)/2(B)	Edit Communications Port Settings
	Upload Communications Port Settings
	Download Communications Port Settings

2-5-5 Tool Bar Icons

- Standard Tool Bar

These icons are for the operation of project-related functions.

- Trace Tool Bar

These icons are for the operation of trace-related functions.

- Protocol Tool Bar

These icons are for the operation of protocol-related functions.

- PLC Status Bar

The PLC modes, such as offline, program, and monitor modes, and corresponding PLC models are displayed.

List of Tool Bar Icons

Tool bar	Icon	Corresponding menu
Standard tool bar		New
		Open
		Save
		Cut
		Copy
		Paste
		Print
		About
		Help
Trace tool bar		Start one-shot trace
		Start Continuous trace
		Stop trace
		Upload trace

Tool bar	Icon	Corresponding menu
Protocol tool bar		Download Protocols
		Download Communications Port Settings
		Upload Communications Port Settings
		Upload Protocols
		Compare Protocols
		Delete
		Up
		Down
		Top
		Bottom
PLC status bar	---	Off-line/PLC Mode
	---	PLC Model

2-5-6 Status Bar

The status bar displays the explanation of the menu or icon of the position where the cursor is located.

Note Select the **Tool Bar** Icon by referring to the corresponding explanation of the icon displayed on the status bar.

SECTION 3
Protocol Macro

This section describes details of the protocol macro functions.

3-1 Protocol Macro Outline 58
3-1-1 Sequence/Step Structure 58
3-1-2 Construction of Send/Receive 61
3-1-3 Transition Stage Between Steps 72
3-1-4 Setting Transmission Mode 72
3-2 Sequence Attributes (Common to All Steps) 75
3-2-1 Setting 75
3-2-2 CX-Protocol Setup Screen 76
3-2-3 Transmission Control Parameter 76
3-2-4 Link Word Addressing 78
3-2-5 Response Type 79
3-2-6 Monitoring Time 83
3-3 Step Attributes 84
3-3-1 CX-Protocol Setup Screen 84
3-3-2 Setting 85
3-3-3 Repeat Counter 87
3-3-4 Commands 89
3-3-5 Retry Count 91
3-3-6 Send Wait Time 92
3-3-7 Send Message/Receive Message 92
3-3-8 With/Without Response Writing 93
3-3-9 Next Process/Error Process 93
3-4 Communication Message Attributes 95
3-4-1 CX-Protocol Setup Screen 96
3-4-2 Header 96
3-4-3 Address 96
3-4-4 Length 96
3-4-5 Data 97
3-4-6 Error Check Code 98
3-4-7 Terminator 98
3-4-8 Message Item Data Attributes 98
3-4-9 Supplemental Notes on Message Setup 110
3-5 Creating Matrices 112
3-6 Examples of Standard System Protocols 116
3-6-1 “Process Value Read” Sequence of the “Controller (E5_K Read)” Protocol 116
3-6-2 “Modem Initialize (MD24FB10V)” Sequence of “Hayes Modem AT Commands” Protocol 117
3-7 Example of Communications Sequence 118
3-7-1 Sequence Setup Content 118
3-7-2 Step Setup Content 118
3-7-3 Send and Receive Messages Creation 119
3-7-4 Contents of Sequence 121
3-8 Executing a Created Communications Sequence (CS/CJ) 121
3-8-1 Device Connection 122
3-8-2 Initial Setup 122
3-8-3 Creating Ladder Programs 123
3-8-4 Operation 127
3-8-5 Confirming the Operation 128
3-9 Executing a Created Communications Sequence (C200HX/HG/HE) 128
3-9-1 Device Connection 129
3-9-2 Initial Setup 129
3-9-3 Creating Ladder Programs 130
3-9-4 Operation 133
3-9-5 Confirming the Operation 134
3-10 Auxiliary Area and Allocated Data Areas 134
3-10-1 Special Auxiliary and Allocated Areas 134
3-10-2 Description of Each Area 140

3-1 Protocol Macro Outline

The Protocol Support Tool allows users to freely create and edit protocols, which are procedures for sending data to and receiving data from general-purpose devices connected to the PMSU (see note) through RS-232C or RS-422A/485. The protocol macro is a function to implement the sending and the receiving messages by the execution of a starting instruction for the protocol macro (PMCR instruction) of the CPU Unit's user program.

For CJ2/CJ3 CPU Units, the PMCR2 instruction can be used in addition to the PMCR instruction. For details of the PMCR and PMCR2 instructions for CS/CJ-series Units, refer to the *SYSMAC CS/CJ-Series Programmable Controllers Instructions Reference Manual* (W474). For details of the PMCR instructions for SYSMAC Alpha-Series (C200HX/HG/HE) Units, refer to the *Programmable Controllers C200HX/HG/HE-CPU□□-ZE Operation Manual* (W322).

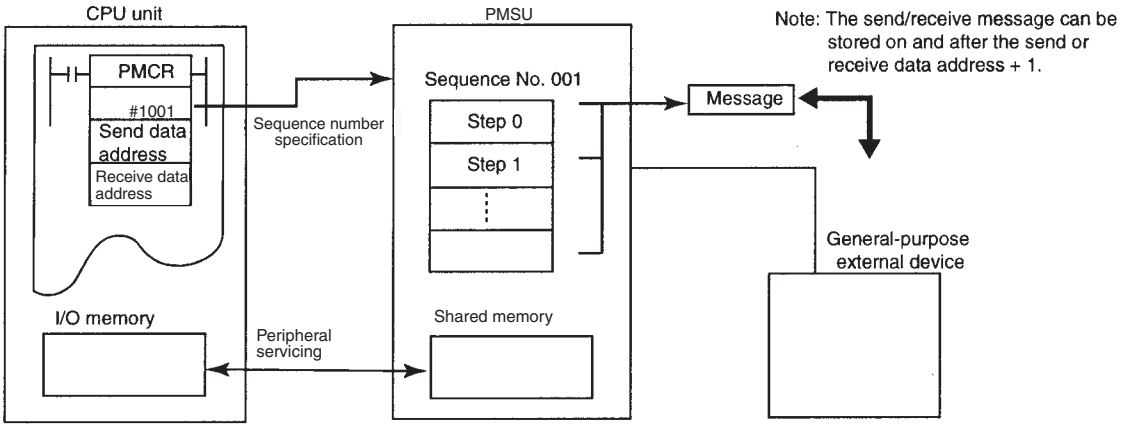

Note In this section, the Communications Board for the C200HX/HG/HE, the Communications Board for the CQM1H, the Serial Communications Board for the CS, and the Serial Communications Units for the CS/CJ are all referred to as the "PMSU" (Protocol Macro Support Unit).

3-1-1 Sequence/Step Structure

One sequence consists of up to 16 steps. One step includes one command (Send, Receive, Send&Receive, Open, Close, Flush, or Wait (for CS/CJ only)) and one or two messages (Send, Receive, or Send&Receive). Step transition is designated by the "next process/error process" within the step.

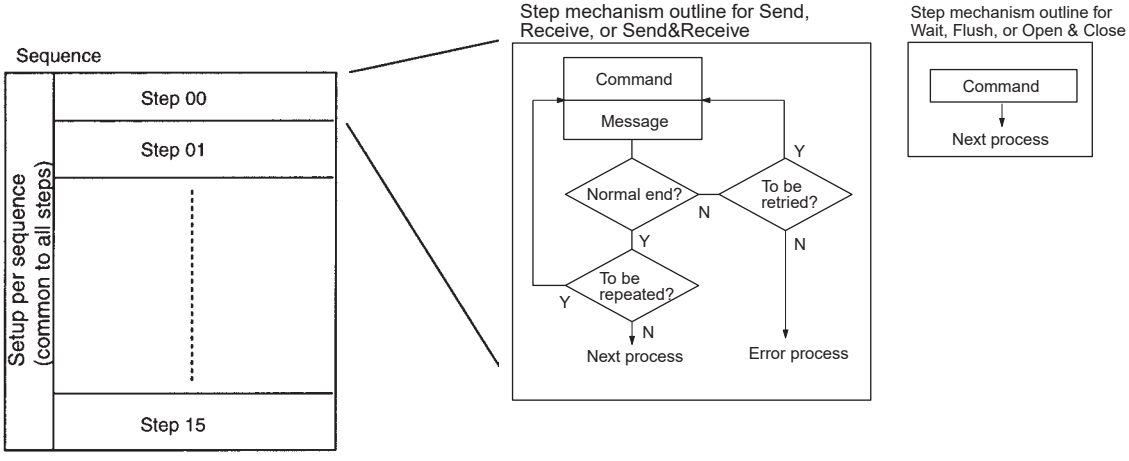

1,2,3... 1. Sequence-specific data (common to all steps)

Setup Item	Description
Transmission control parameter	X-on/X-off flow control, RTS/CTS flow control, modem control, delimiter control, or contention control
Link word	Shared memory area between the PLC and the PMSU.
Monitoring time	Time for monitoring send and receive process.
Response type	Timing for writing received data.

2. Step-specific data

Setup Item	Description	Command type						
		Send	Receive	Send& Receive	Wait (see note)	Flush (see note)	Open (see note)	Close (see note)
Command	Send, Receive, Send&Receive, Wait*, Flush*, Open* or Close*	---	---	---	---	---	---	---
Repeat counter	The number of times to iterate the step (1 to 255)	O	O	O	---	---	---	---
Send message	The contents set here are sent as a message.	O	---	O	---	---	---	---
Receive message	The message that was actually received is compared with the data set here.	---	O	O	---	---	---	---
Matrix	Selects the next process according to message expected to be received (up to 15 types).	---	O	O	---	---	---	---
Retry count	The number of times for retrying the command when some retry factor such as an error arises.	---	---	O	---	---	---	---
Send wait time	Wait time for starting data sending for a Send command.	O	---	O	---	---	---	---
With/Without Response Writing (operand addressing)	Designates whether to write received data.	---	O	O	---	---	---	---
Next process	Designates the next step to which control will go to when the system ends normally.	O	O	O	O	O	O	O
Error process	Designates the next step to which control will go to when the system ends abnormally.	O	O	O	---	---	---	---

Note For CS/CJ protocol macro only.

3. Message structure and content

Messages to be sent and received are generally structured as follows:

1) Messages containing header and terminator

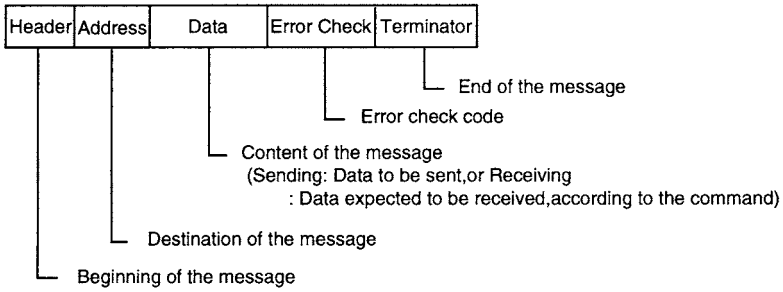

The check code and the terminator can be replaced with each other.

Note With the C200HX/HG/HE, possible only when the C200HW-COM□□-EV1 Communications Board is used.

Header	Address	Data	Terminator	Check code

2) Messages containing header and data length

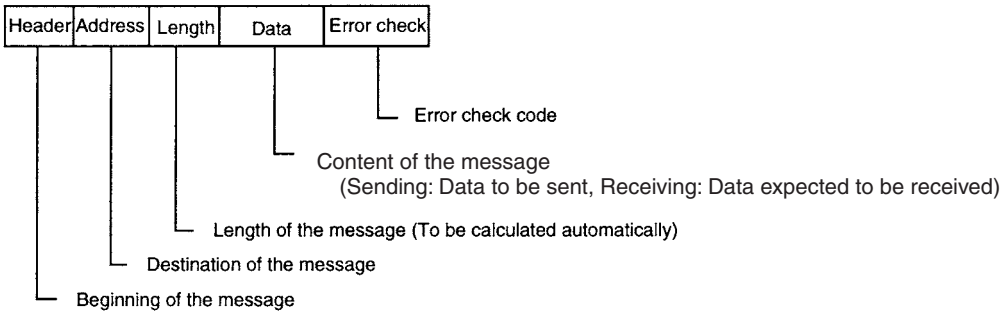

Setup Item	Meaning	Data attributes	
		Constant	Variable
Header	Beginning of message	O	---
Address	Message destination	O	O
Length	Message length	---	O
Data	Message body	O	O
Check code	Error check code	---	O
Terminator	End of message	O	---

- Input the constant in the header and terminator.
- Either the constant or variable can be input in the address and data. By including variables in the address and data, the address or data can be retrieved from the designated area of the I/O memory and the transmitted or received data can be written in the designated area of the I/O memory.

3-1-2 Construction of Send/Receive

Outline of Construction

The construction of send and receive messages with the protocol macro function is shown below.

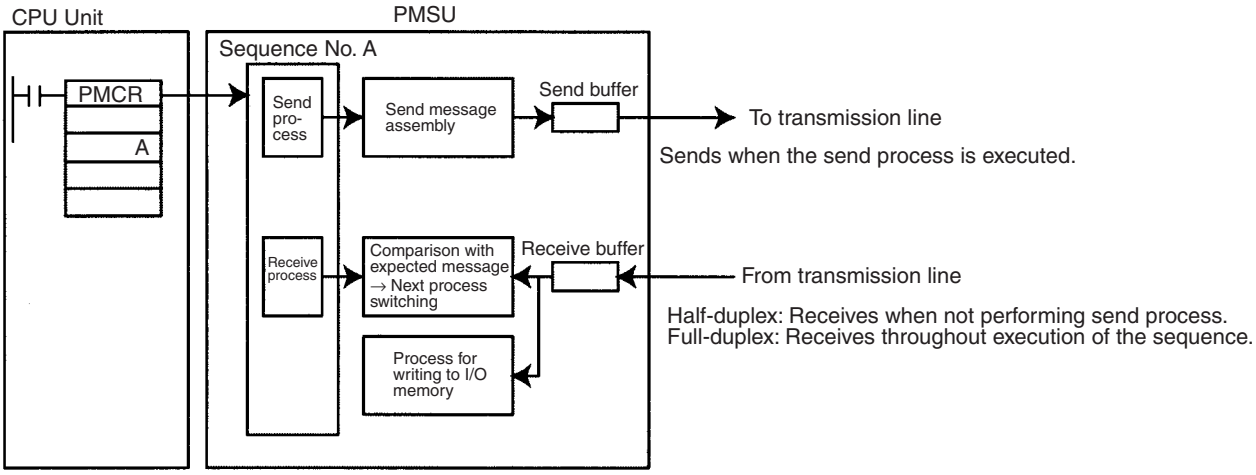

CPU Unit		PMSU	
		Internal process	**Buffer**
Following PMCR instruction, designates execution sequence number for the PMSU.	Send	Following send process (Send command, Send&Receive command), data from I/O memory is converted under the designated conversion formula and the send message is assembled and is transferred to the send buffer.	The send message moves to the transmission line via the send buffer.
	Receive	Following receive process (Receive command, Send&Receive command): 1. The data in the receive buffer is input, comparison with the expected message is executed, and switching of the next process takes place. 2. If there is a Response Write, the data will be written to I/O memory after being converted with the designated conversion formula.	Half-duplex: Data that is received from the transmission line when send process is not being performed will be saved in the receive buffer. Full-duplex: All data received from the transmission line during sequence execution will be saved in the receive buffer.

Send Process (Send Command, Send & Receive Command)

If the Send command (or the Send&Receive command) is executed with a certain step, the send message set by that step will be assembled and sent from the send buffer as shown below. If a variable (reading variable) has been integrated into the send message, the appropriate data will be read from I/O memory and converted to the designated form according to the variable, and the send message will be assembled.

Note When a send completion monitoring time has been set for send process and the time is exceeded without sending a message, the step will end abnormally and the system will move to the error process. Otherwise, the step will end normally and move to the next process.

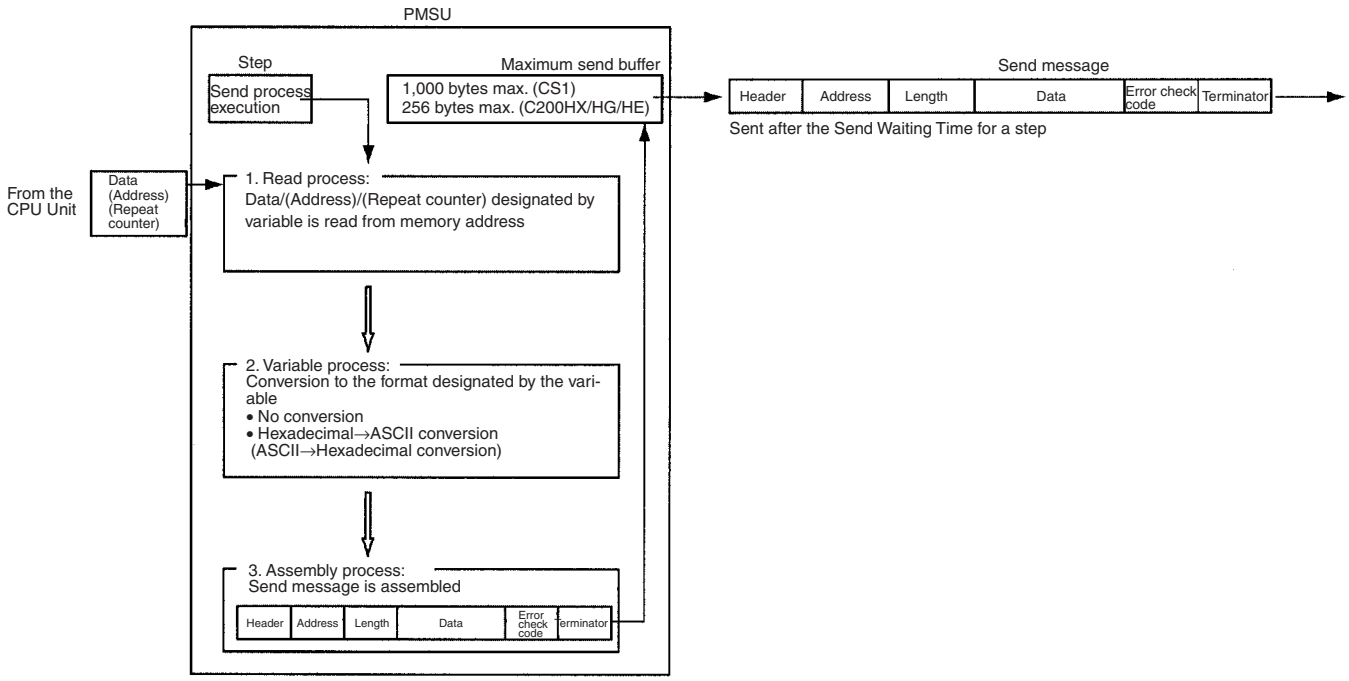

Receive Process (Receive Command, Send & Receive Command)

If, with a certain step, the Receive command (or the Send&Receive Command) is executed, the data will be taken out of the receive buffer and a comparison with the expected message will be made. If the data does not correspond, the step will end abnormally and the system will move to the error process. If the data does correspond and a variable (write variable) has been integrated into the expected message, it will be converted to the format designated by the variable, and write process to I/O memory in the CPU Unit will be performed. All processing for the step will be completed and the system will move to the next process.

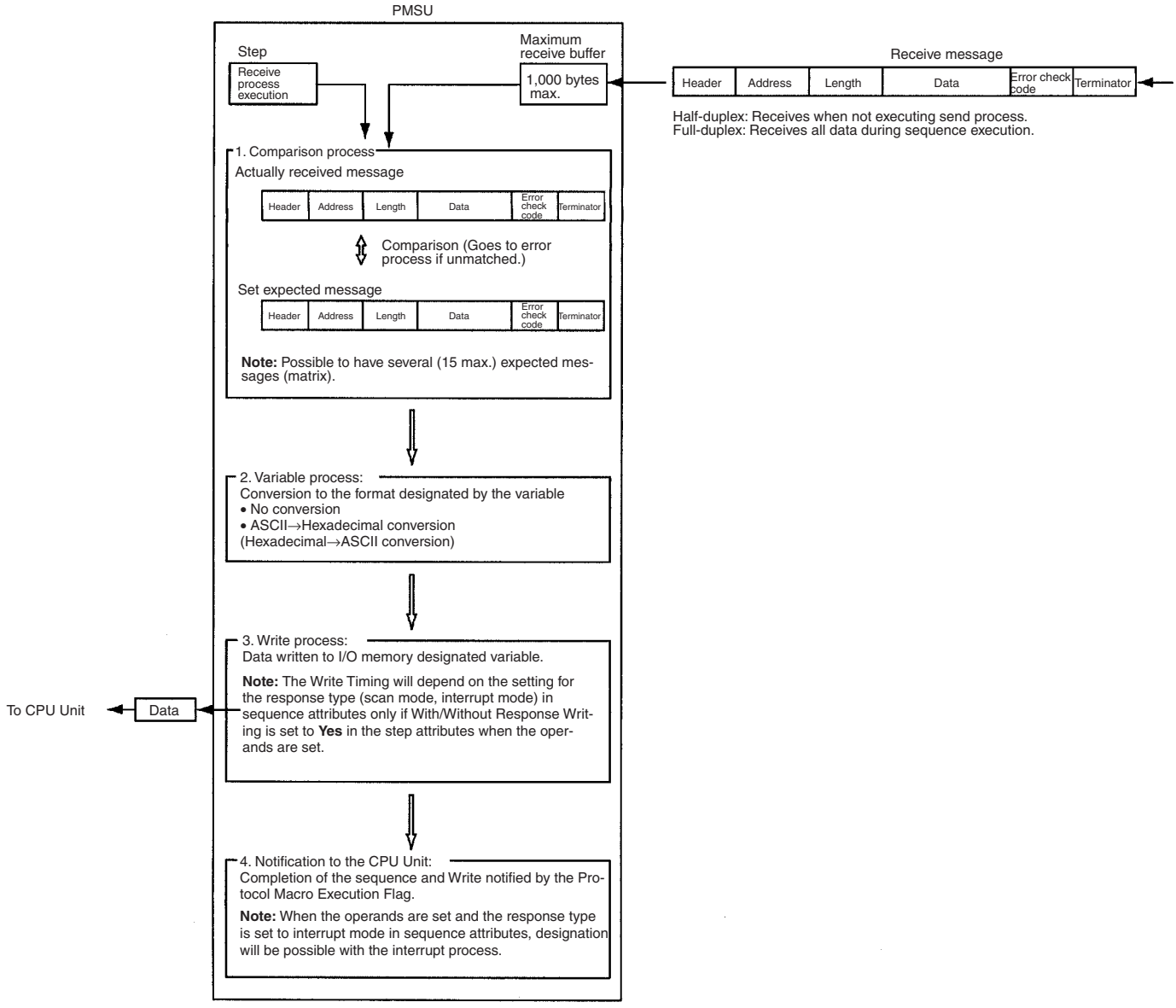

Send & Receive Process (Send & Receive Command)

The receive (Receive) process will start approximately 60 µs after the send process is completed.

In general, when communications commands are sent as send messages and responses are received as receive messages, Send&Receive will be executed.

Note With the CS/CJ, there is a time-lag after send operations for the half-duplex (refer to page 72).

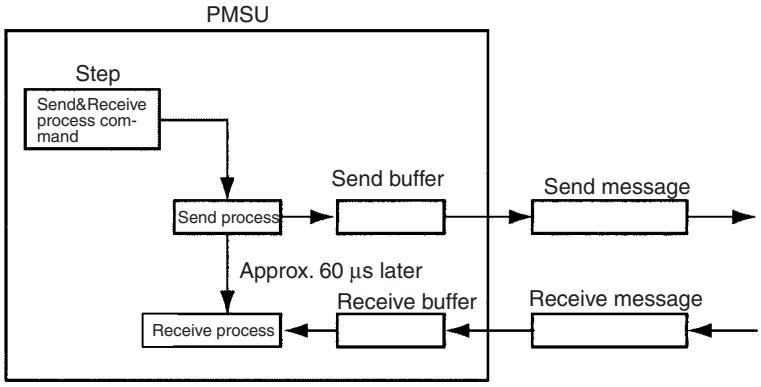

Note: Retry can be designated with Send&Receive.

Clear Process (Flush Command) for Receive Buffer (CS/CJ only)

By executing the Flush command, all the data in the receive buffer is cleared. For example, this is used in the full-duplex mode before executing the receive process, to clear data left in the receive buffer because of noise.

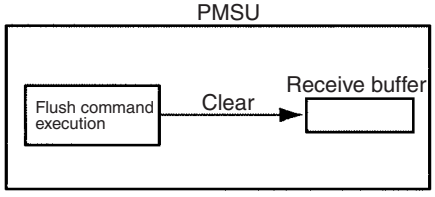

This command can also be used, for example, in full-duplex mode when a communications error occurs. Without aborting, switch the step in Goto, execute the Flush command in the step, clear the receive buffer, and retry.

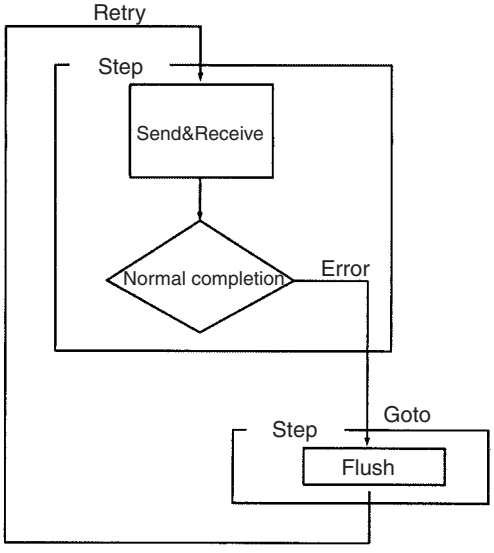

Integration of Variables

One of the characteristics of sending and receiving data with the protocol macro function is the way that instructions (variables) for reading from and writing to I/O memory in the CPU Unit can be integrated in the send and receive messages themselves.

Sending

Example: CS/CJ

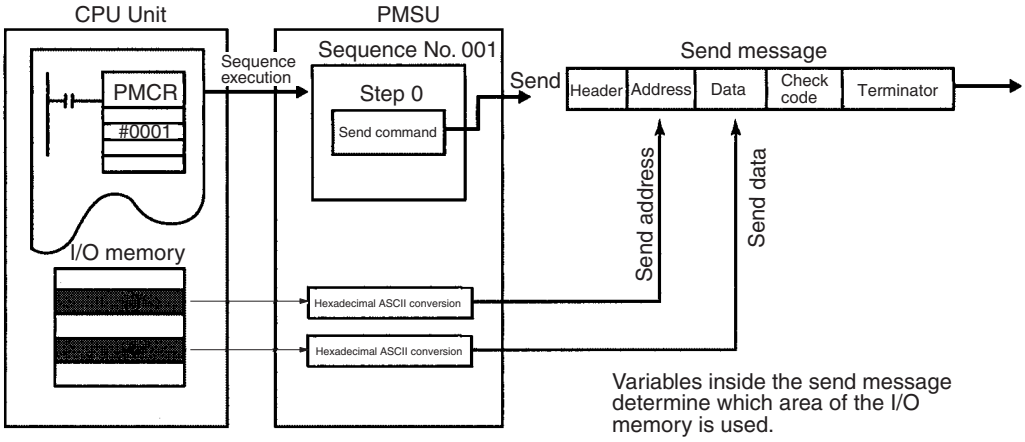

Receiving

Example: CS/CJ

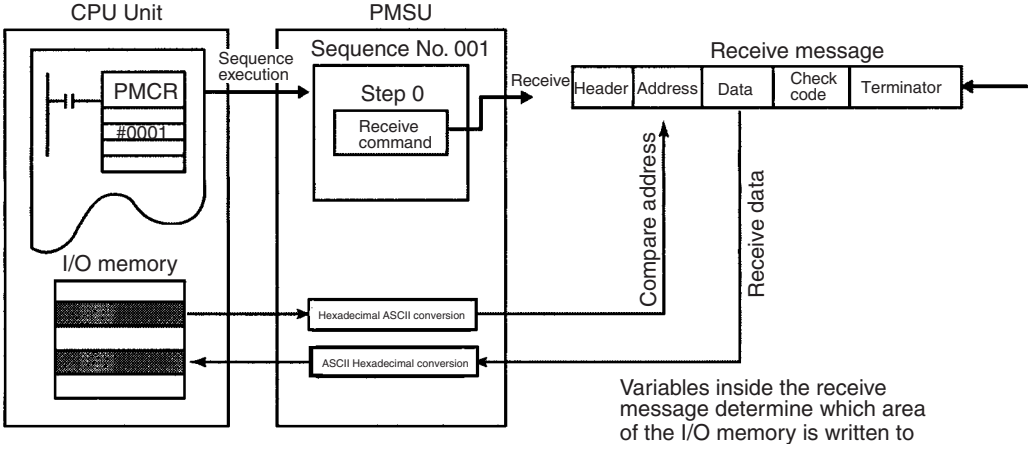

To designate which area of I/O memory is used for creating send messages and which area of I/O memory is used for storing receive messages, the following three methods can be used.

1,2,3...

1. Operand Designation: Use the designated memory address with the operands for the PMCR instruction.
2. Direct Designation: Directly designate the I/O memory address.
3. Link Word Designation: Use the shared data area (link word) between the CPU Unit and the PMSU.

Designation Methods for Send/Receive Data Area

Designation method	Function	Symbol in message to be designated	Application
Operand designation (set within send/ receive message)	The I/O memory area is designated using the third (first word of send data storage area) and fourth (first word of receive data storage area) operands (second and third operands for C200HX/HG/HE) in the PMCR instruction of a ladder program within the send/receive message. Sending and receiving will be carried out using the designated I/O memory area. It is possible to set the system to either write or not write the receive data in the buffer area (having been converted under the designated conversion method) after each step using the With/Without Response Writing setting for step attributes. When the receive process is executed following a step command which has been set to With Response Write, the receive data in the receive buffer will generally be written to the CPU Unit's I/O memory in one of the two ways shown below. (Set with the response type for sequence attributes. For details refer to page 79.) 1.Scan notification mode: With each CPU Unit scan, receive data is written to I/O memory. Since the CPU Unit refreshes with each scan, writing to the I/O memory area will not take place simultaneously with receive process and there will be a time-lag. 2. Interrupt notification mode: When data is received, an interrupt is executed at the CPU Unit and the receive data is immediately written to the designated I/O memory area. (Either the fixed number or the receive case number are possible for the interrupt program number) **Note**: After the sequence has been completed, the data in the receive buffer will be read to I/O memory by the scan notification method.	Word read: R(z) 3rd operand in PMCR instruction (2nd operand for C200HX/HG/HE) Designate word+ z word Word write: W(z) 4th operand in PMCR instruction (3rd operand for C200HX/HG/HE) Designate word+ z word	With a PMCR instruction in a ladder program, the data area that is jointly used for the sequence can be set automatically. Using the interrupt function, high-response processing can be achieved.
Direct designation (set within send/ receive message)	The I/O memory address is set directly, in the send/receive message. Since the CPU Unit refreshes with each scan, writing to the I/O memory area will not take place simultaneously with receive process and there will be a time-lag.	CIO□□□ WR□□□□ (note 1) LR□□□□ (note 2) HR□□□□ AR□□□□ DM□□□□□ EM□□□□□ □: Word number	Set when allocating a fixed data area and used separately within the step. When changing, it will be necessary to correct the step and resend.
Link word designation (set with sequence attributes)	A holding data shared area is designated for the CPU Unit and the PMSU. It is possible to set two link words, 1 and 2. Link word 1: IN (receive data storage) OUT (send data storage) Link word 2: IN (receive data storage) OUT (send data storage) Designations are made under the I1, I2, I3, and I4. Since the CPU Unit refreshes with each scan, writing to the I/O memory area will not take place simultaneously with receive process and there will be a time-lag.	I1 (IN for link word 1) O1 (OUT for link word 1) I2 (IN for link word 2) O2 (OUT for link word 2)	Set when allocating a fixed data area and used separately within the step. When changing, it will be necessary to correct the step and resend.

Note 1. CS/CJ only.
2. C200HX/HG/HE only.

Using Operand-designated I/O Memory Area in a PMCR Instruction (Operand Designation)

Creation of send messages and storage of receive messages is performed with the memory address designated by operands 3 and 4 (2 and 3 for the C200HX/HG/HE) in the PMCR instruction.

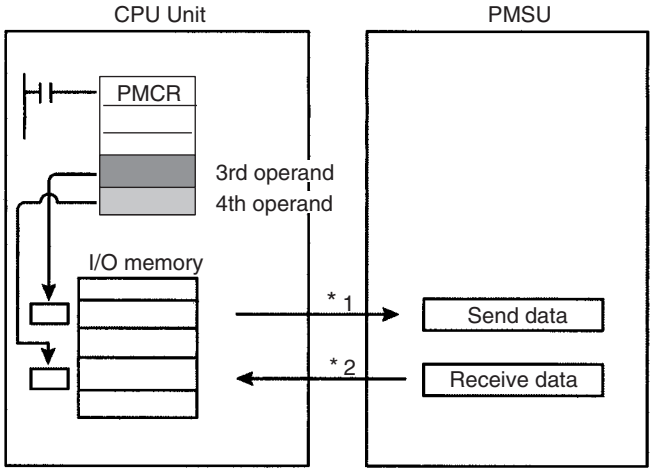

*1: During PMCR execution.

*2: If the With/Without Response Type setting that is set for each step is **Yes** and the receive process is executed, the time required for the data to be reflected in I/O memory will depend on the response type setting (i.e., whether it is the Scan Notification Method, Interrupt Notification Method [fixed number], or Interrupt Notification Method [receive case number]).

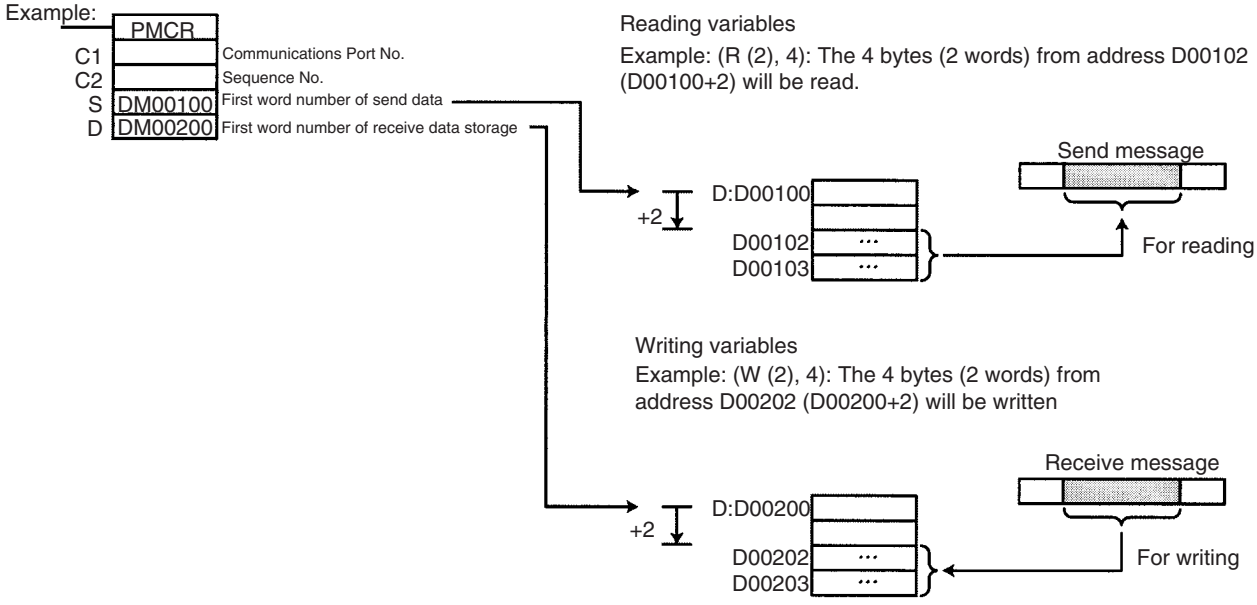

Direct Designation of I/O Memory Area Address

Creation of send messages and storage of receive messages is performed with the I/O memory address designated directly.

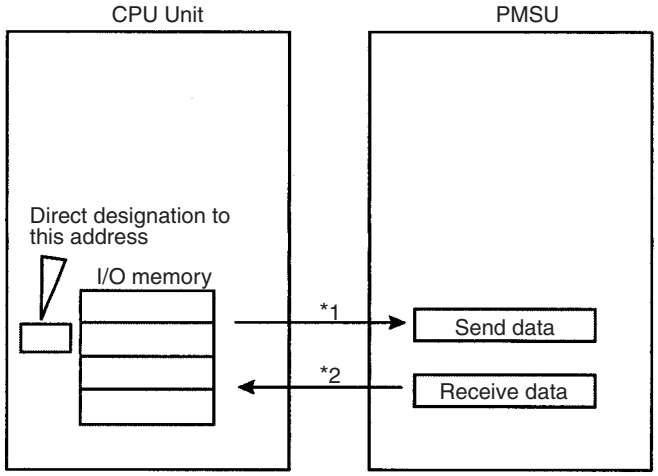

*1: During message sending
*2: During message receiving
The timing with which the data is reflected in I/O memory depends on the scan for the CPU Unit.

Reading Variables

Example: (R (D00102), 4): The 4 bytes (2 words) starting from D00102 will be read.

Writing Variables

Example: (W (D00202), 4): The 4 bytes (2 words) starting from D00202 will be written.

Using a Shared Data (Link Word) Area for the CPU Unit and the PMSU (Link Word Designation)

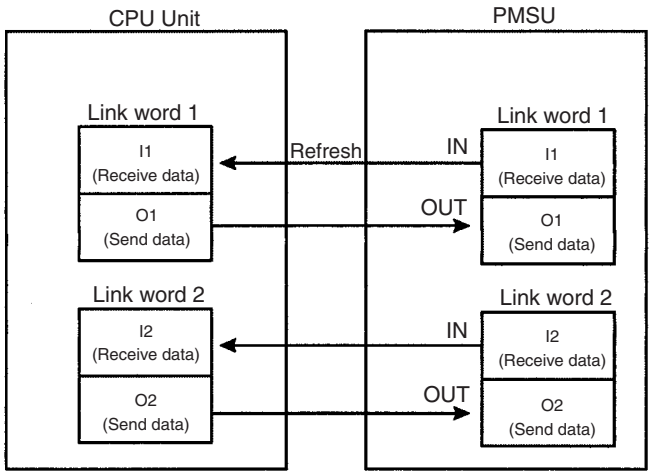

Items to set:

Link word 1
IN: first word address (area classification and address), number of words (0 to 500) *

OUT: first word address (area classification and address), number of words (0 to 500) *

Link word 2
IN: first word address (area classification and address), number of words (0 to 500) *

OUT: first word address (area classification and address), number of words (0 to 500) *

*Settings of up to 500 words (CS/CJ) or 128 words (C200HX/HG/HE) can be made for IN and OUT for both link words 1 and 2.

Creation of send messages and storage of receive messages is performed using the link word area.

Reading Variables

Example: (R (O1), 2): 2 bytes will be read from link word output area O1.

Writing Variables

Example: (W (I1), 2): 2 bytes will be written from link word input area I1.

Related Settings

Designation method	Send/receive message	Step	Sequence (shared for steps)
Operand designation	Integrate variables into address or data	With/Without Response Writing (when operand-designated variables are in the receive message) Variable setting for number of iterations setting with the repeat counter	Response type (when operand-designated variables are in the receive message)
Direct designation	Integrate variables into address or data	Variable setting for number of iterations setting with the repeat counter	---
Link word designation	Integrate variables into address or data	Variable setting for number of iterations setting with the repeat counter	Link word

Note Receive Process with Operand-designated Variables

When operand-designated variables are in the receive message, the receive process will be performed as shown below.

When the receive process is executed, data in the receive buffer will be read, and using that data as the receive message, the following process will be performed.

Process	Response Write for step attributes		Response type for sequence attributes		
	Without	With	Scan notification	Interrupt notification (fixed number)	Interrupt notification (receive case number)
1. Comparison with expected message	Yes	Yes	---	---	---
2. Conversion under the formula designated by variables	Yes	Yes	---	---	---
3. Write to I/O memory	No	Yes	Writes at scan time.	Writes immediately after conversion.	
Notification to CPU Unit	Yes	Yes	Turns the PMCR Execution Flag OFF after writing and after sequence is completed.		
			---	Designates fixed interruption task (program) number and executes the interrupt process	Designates calculated interruption task (program) number and executes the interrupt process

Wait Process (Wait Command)

When only using the Send/Receive/Send&Receive commands after sequence execution has started, the progression of steps will be determined by the results of each successive step (normal end/abnormal end). The progression cannot be stopped.

To stop the progression of steps during sequence processing, use the Wait command (only possible with CS/CJ).

If the Wait command is issued during a step:

1,2,3...

1. When the wait-cancel soft-switch is turned OFF, the progress of the steps will stop and the sequence will go into standby status.

   If the wait-cancel soft-switch is turned ON in the ladder program, the standby status will end and the sequence will go to the next process. During the standby status, the Wait Flag will turn ON.

2. When the wait-cancel soft-switch is turned ON, the sequence will proceed to the next process without going to standby.
   Simultaneously, the wait-cancel soft-switch will be turned OFF.

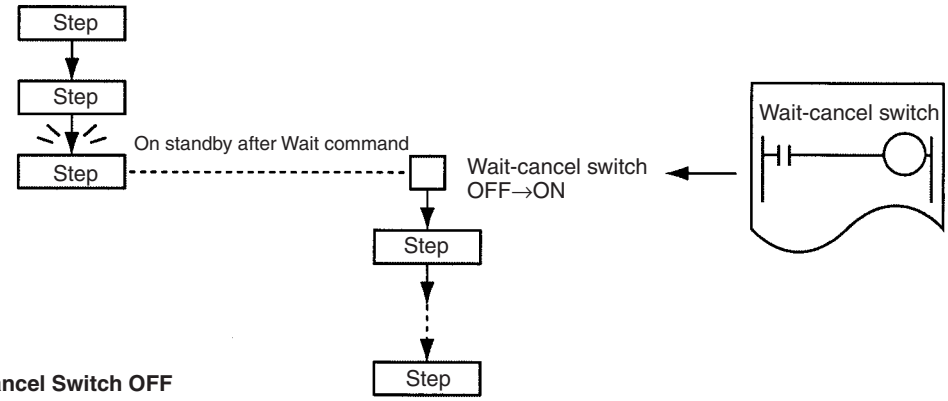

Wait-cancel Switch OFF

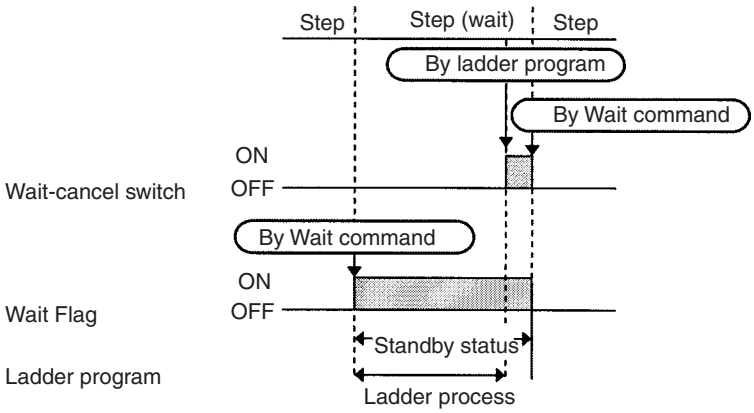

Wait-cancel Switch ON

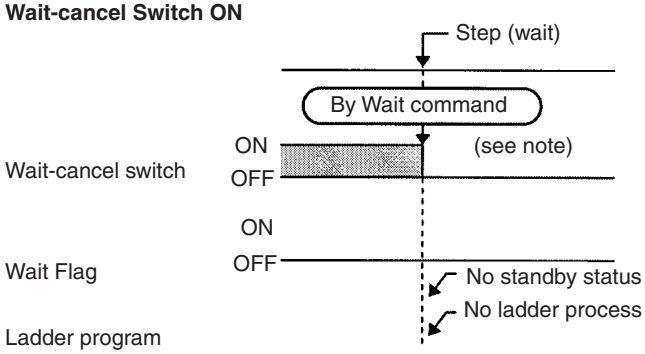

Note: If the Wait command is executed while the wait-cancel switch is ON, the sequence will not wait but the Wait-cancel Flag will be turned ON.

Note

1. The wait-cancel switch is turned from OFF to ON using the SET instruction in the ladder program. When setting (temporary manual setting) with the Programming Console, the protocol macro standby may not be able to turn the wait-cancel switch from ON to OFF because ON will be held for a moment while the key is depressed.
2. If the receive buffer may become full during wait standby (e.g. with full-duplex), use in combination with flow control.

3. Wait command can be used to set the system to proceed to the next step after allowing the CPU Unit to complete processing, such as internal computation.

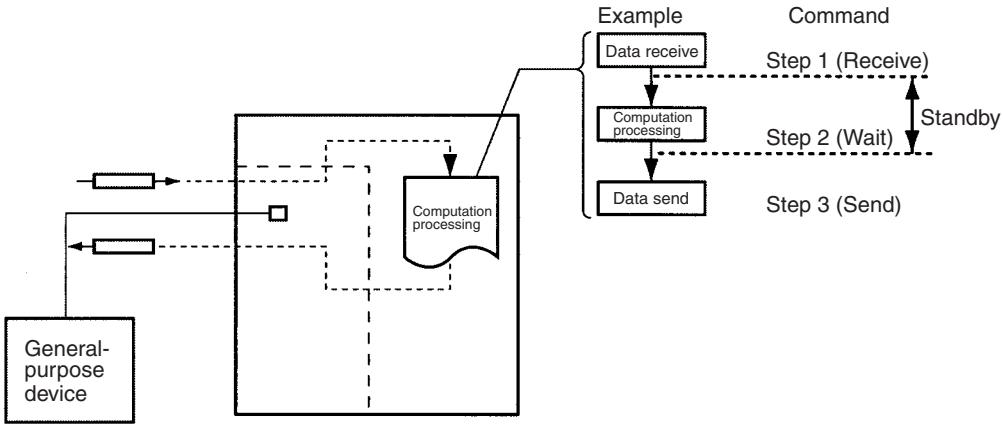

If used in combination with a matrix, it is possible to set up the system so that when certain data is received, the send/receive sequence will be put on standby and computational processing (e.g. data processing) will be performed at the CPU Unit before proceeding to the next communications process.

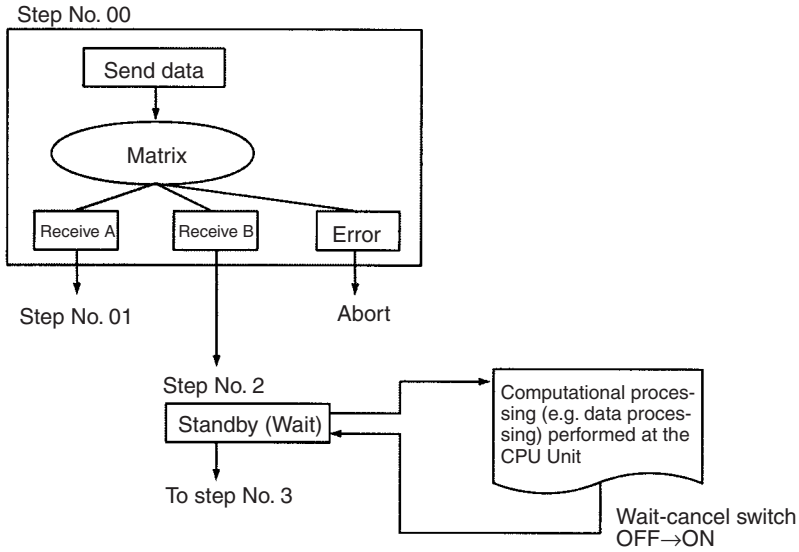

3-1-3 Transition Stage Between Steps

Following execution of a command within a step, the next process will switch in the following way depending on the result of the send or receive process.

Process		Conditions for error process	Conditions for next process
Send		Send not completed within send monitoring time.	Any condition not listed under “conditions for error process.”
Receive	Receive message	The actual received message and the set expected message do not correspond. Other errors with data communications. (For details, refer to *3-3-9 Next Process/Error Process.*)	Any condition not listed under “conditions for error process.”
	Matrix	Error with data communications	Compares the actual received message with a maximum of 15 kinds of expected message, and depending on the contents, switches the next process as required.
Contents of error process or next process		Goto ∗∗: Goes to a designated step. Next: Goes to the next step. End: Ends the sequence. Abort: Aborts the step and ends the sequence.	Goto ∗∗: Goes to a designated step. Next: Goes to the next step. End: Ends the sequence. Abort: Aborts the step and ends the sequence.

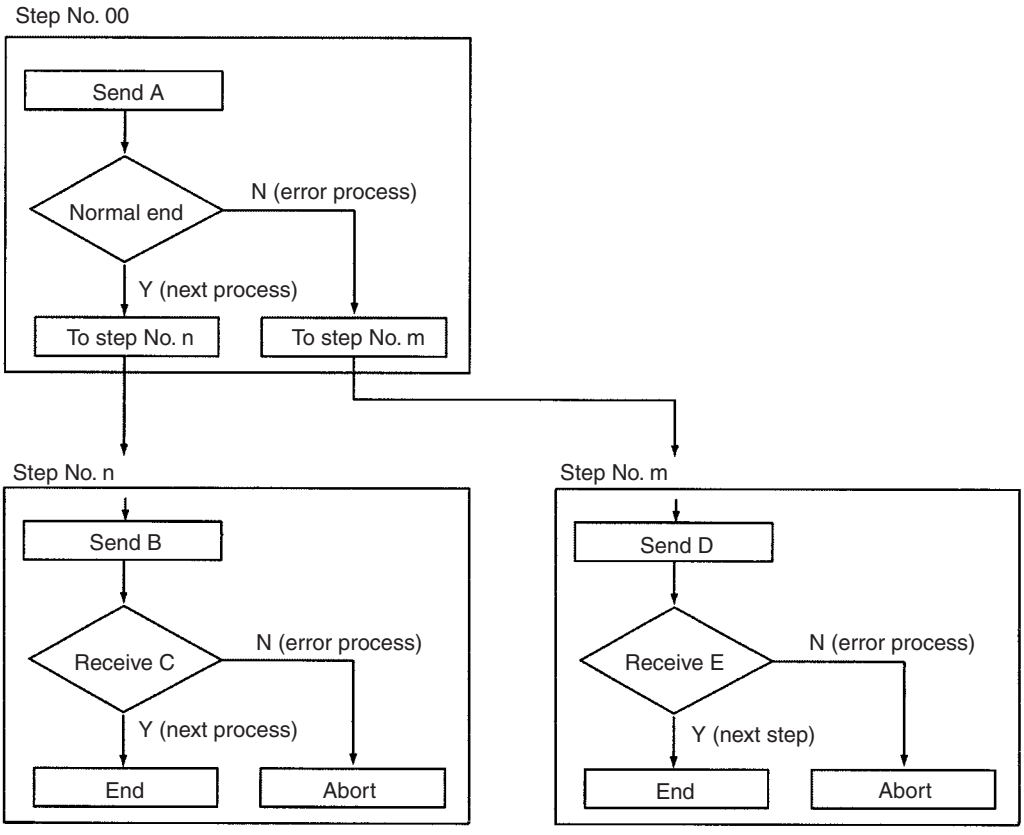

3-1-4 Setting Transmission Mode

With the protocol macro function, half-duplex mode or full-duplex mode can be selected so as to match the transmission mode for the destination device.

Note 1. Half-duplex Mode: For communications between two devices, data can only be sent one-way at a given time.

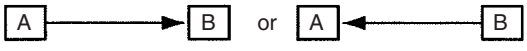

2. Full-duplex Mode: For communications between two devices, data can be sent both ways simultaneously.

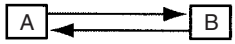

In half-duplex mode, the receive buffer is cleared just before sequence execution and just after completion of send operations (Send, Send&Receive commands). Any data received before or during a send operation cannot be received as data for the next receive operation.

Transmission mode	Clear timing for receive buffer	Receive data	Character trace	Timing chart (example)
Half-duplex	Just before execution of communications sequence Just after execution of Send command	Between completion of send operation and completion of receive operation, or between completion of send operation and just before execution of send operation	Everything during trace execution	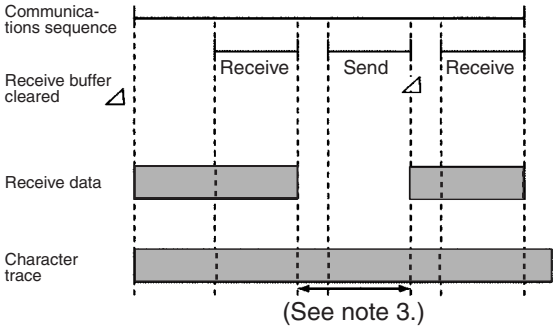
Full-duplex (see note 1)	Only just before execution of communications sequence (see note 2)	Everything during sequence execution	Everything during trace execution	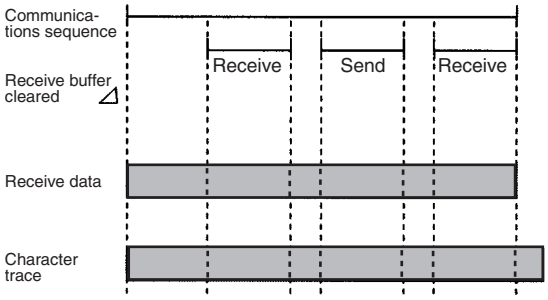

Note

1. The full-duplex can be used with the RS-232C or the RS-422A/485 (1:1 and 4-wire type). It cannot be used with the RS-422A/485 (1:N or 2-wire type).
2. Clearing of receive buffer is performed with the Flush command, and will clear the buffer with the desired timing.
3. Although data received up until the completion of send operation will be lost, it will still be reflected in the character trace.

Note When performing send operation in half-duplex mode with the CS/CJ, there will be a time-lag (refer to the table below) between completion of processing for sending data and completion of the send operation. Therefore, if the response of the destination device is fast and data is sent back in half-duplex mode from the time of sending the data (communications commands, etc.) to completing the send operation, the data received during that interval cannot be received. If such a situation seems possible, use full-duplex mode.

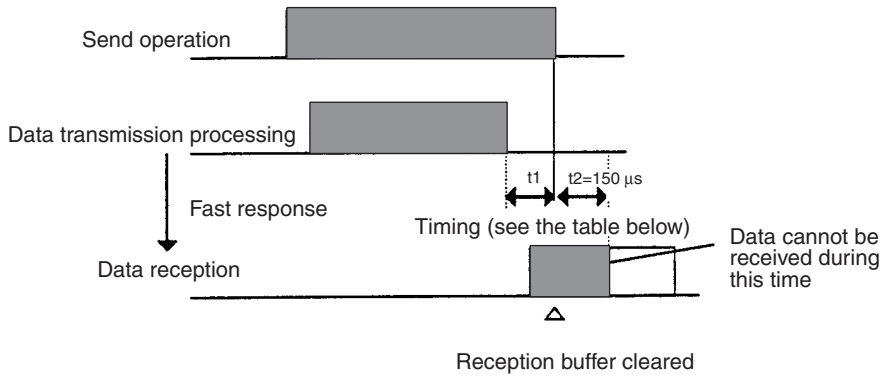

Time-lag

Baud rate (bps)	Time-lag (µs)
1,200	1,116
2,400	578
4,800	288
9,600	144
19,200	73
38,400	36

Note The time-lag is provided to ensure that when using in half-duplex/2-wire mode, the receive operation will be performed after the last stop bit of the send data has entered the circuit.

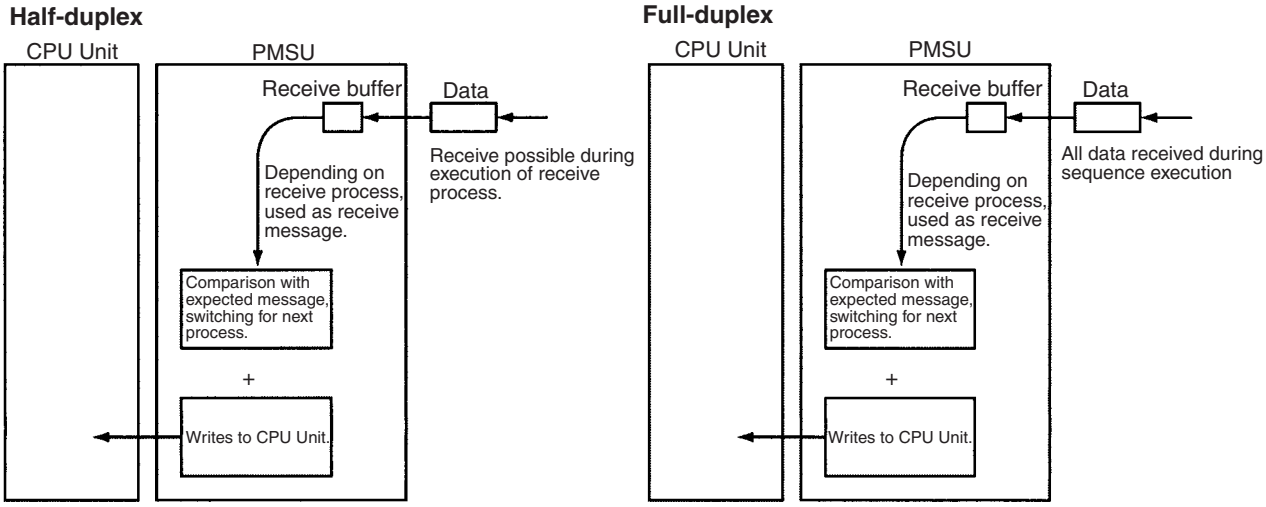

Data received during sending will not be used as receive data. Data received when not sending will be sent to the receive buffer. This data can be extracted using the receive process.

All data received during sequence execution (including data received when not executing the receive process) will be used as the receive message.

During the send process, which includes the Send command, Send&Receive and other commands, the receive process will continue and data will be sent to the receive buffer. Therefore, after the send process and other commands have been completed, this data can, using the receive process, be used as the receive message.

Transmission modes for the Protocol Macro are set in the following way.
m=D30000 + 100 x Unit No.

PLC	Device	Setting area	Address		Bits	Contents
			Port 1	Port 2		
CS/CJ Series	Serial Communications Board	Allocated DM area	D32008	D32018	15	0: Half-duplex (default) 1: Full-duplex
	Serial Communications Unit	Allocated DM area	m+8	m+18	15	0: Half-duplex (default) 1: Full-duplex

3-2 Sequence Attributes (Common to All Steps)

Set the sequence attributes as described in the following.

3-2-1 Setting

Setup Item	Description
Transmission control parameter	X-on/X-off flow control, RTS/CTS flow control, modem control, delimiter control, or contention control
Link word	Shared memory area between the PLC and the Board/Unit.
Response type	Timing for writing received data.
Monitoring time	Time for monitoring send and receive process.

3-2-2 CX-Protocol Setup Screen

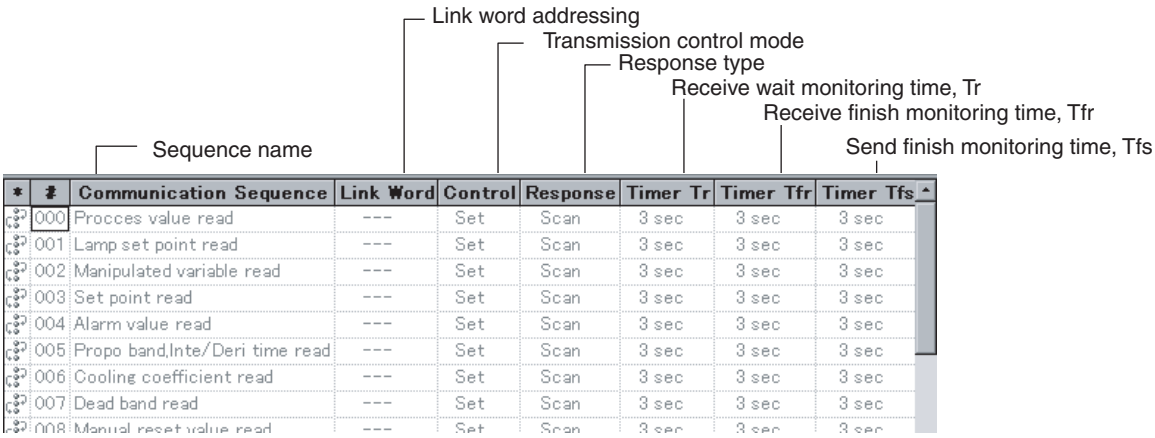

*	#	Communication Sequence	Link Word	Control	Response	Timer Tr	Timer Tfr	Timer Tfs
	000	Procces value read	---	Set	Scan	3 sec	3 sec	3 sec
	001	Lamp set point read	---	Set	Scan	3 sec	3 sec	3 sec
	002	Manipulated variable read	---	Set	Scan	3 sec	3 sec	3 sec
	003	Set point read	---	Set	Scan	3 sec	3 sec	3 sec
	004	Alarm value read	---	Set	Scan	3 sec	3 sec	3 sec
	005	Propo band,Inte/Deri time read	---	Set	Scan	3 sec	3 sec	3 sec
	006	Cooling coefficient read	---	Set	Scan	3 sec	3 sec	3 sec
	007	Dead band read	---	Set	Scan	3 sec	3 sec	3 sec
	008	Manual reset value read	---	Set	Scan	3 sec	3 sec	3 sec

For the details of setup method, refer to *SECTION 7 Sequence Setting and Editing*.

3-2-3 Transmission Control Parameter

Set the transmission control parameters such as the flow control, RTS, CTS, DTR, DSR, etc. The following five types of transmission control are supported. Set the same transmission control modes as for the external device to be communicated with. Note that the modem control parameter can be designated together with other parameters.

Transmission control parameter	Function	Usage
RTS/CTS flow control	Executes flow control by hardware using the RTS and CTS signals.	Set when the external device supports the RTS/CTS flow control.
Xon/Xoff flow control	Executes flow control by software using Xon (11 hexadecimal) and Xoff (13 hexadecimal) codes.	Set when the external device supports the Xon/Xoff flow control.
Modem control	Holds the DTR “ON” during execution of a PMCR instruction, and turns ON the RTS when data is sent. Possible to turn the DTR signal ON or OFF at any timing using the Open or Close command for each step. Once the DTR signal is turned ON using the Open command, it will remain ON until it is turned OFF using the Close command. Furthermore, once the DTR signal is turned ON using the Open command, it will remain ON even after a sequence is completed and another sequence is started. Therefore, the DTR signal can be used for controlling more than one sequence.	Set when the external device checks the DSR status. Must be used if the internal RS-422 port is to be used. Must be used also if an external RS-422/RS-485 converter is connected to RS-232C port.
Contention control	Transmission control mode for getting the correct send in point-to-point contention communication.	Set when the external device supports contention control.
Delimiter control	For sending or receiving a large quantity of data, this procedure separates data into several frames with delimiters.	Set when the external device supports delimiter control.

Note Unless modem control is set, the DTR on the port of the PMSU cannot be turned ON. When both modem control and RTS/CTS control are set, the DTR complies with modem control, and the RTS and CTS comply with RTS/CTS flow control.

Transmission control parameter	Settings on the SYSMAC-PST
RTS/CTS flow control	None: No RTS/CTS flow control Send: RTS/CTS flow control only during sending Receive: RTS/CTS flow control only during receiving Send&Receive: RTS/CTS flow control during both sending and receiving
Xon/Xoff flow control	None: No Xon/Xoff flow control Send: Xon/Xoff flow control only during sending Receive: Xon/Xoff flow control only during receiving Send&Receive: Xon/Xoff flow control during both sending and receiving
Modem control	Yes/No
Contention control	No Yes: Send request code; either control code or ASCII, hexadecimal
Delimiter control	No Yes: Send request code; either control code or ASCII, hexadecimal Receive request code; either control code or ASCII, hexadecimal

CX-Protocol Window

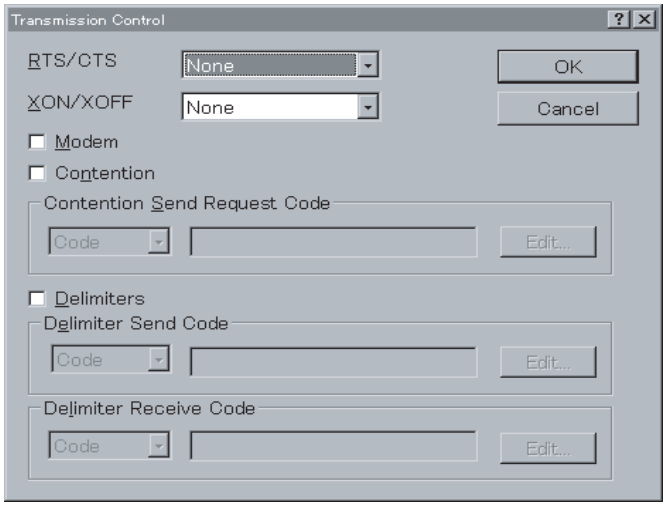

Note

1. Note that the RTS/CTS flow control cannot be set at the same time as the Xon/Xoff control.
2. When using a 2-wire connection for the RS-422A/485 port, use only modem control and do not select RTC/CTS control in the transmission control parameters.
3. With the CS/CJ protocol macro, each port is provided with a receive buffer (2.5 Kbytes max.). When receiving large amounts of data or when the communications sequence is set to the wait state, a large-capacity receive buffer may be required. However, when the protocol macro function is used, received data exceeding the receive buffer capacity will be overwrit-

ten on the 2.5-Kbyte data already received. Therefore, be sure to set the flow control if such a large data transmission is expected.

3-2-4 Link Word Addressing

Use the following procedure to use the link word addressing for designating transmission data storage locations.

Addressing	Function	Identification code in messages	Use
Link word addressing	Designates an area on which data is shared between the PLC and the PMSU. Two sets of link words (link word 1 and link word 2) can be set as such areas. Link Word 1: IN (for storing receive data) OUT (for storing send data) Link Word 2: IN (for storing receive data) OUT (for storing send data) Set these areas using the reserved words I1, I2, O1, or O2. Writing operation to the I/O memory will not be synchronized with data reception because these words are refreshed at each PLC scan, thus inducing some time-lag. Directly addresses an I/O memory within a send or receive message.	I1 (IN of link word 1) O1 (OUT of link word 1) I2 (IN of link word 2) O2 (OUT of link word 2)	This mode is used to assign a fixed data area commonly used by all steps in a sequence. Changing link words requires modification and retransmission of the sequence.

Link Word Designation

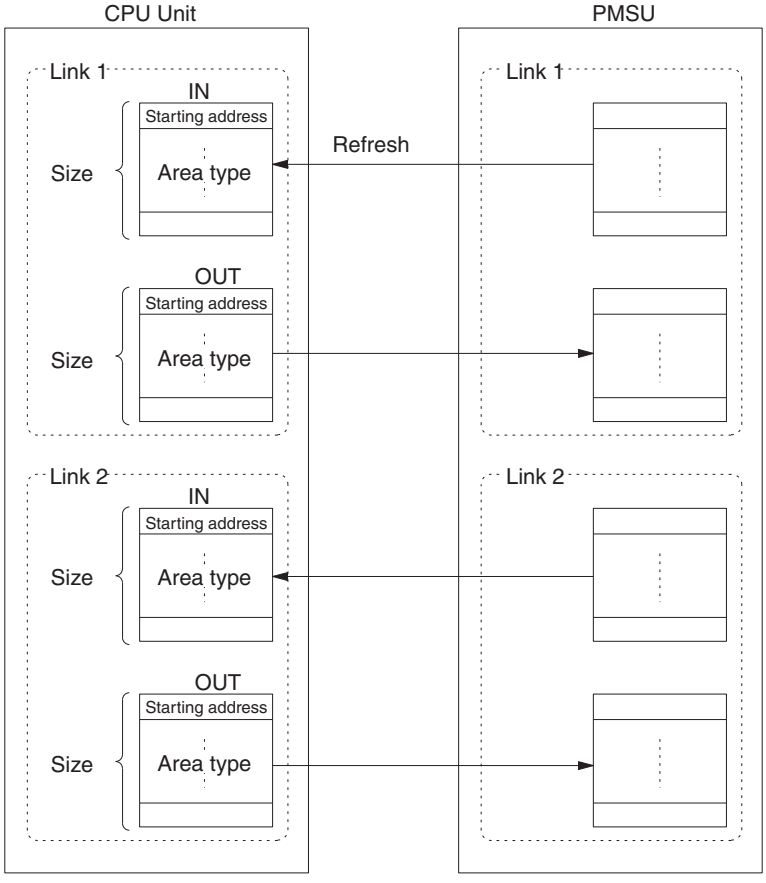

Area Type and Size

PLC		CS/CJ	C200HX/HG/HE
Area type and address subject to link word addressing		CIO: 0000 to 6143 WR: 000 to 511 HR: 000 to 511 AR: 000 to 511 DM: 00000 to 32767 EM: 00000 to 32767 **Note**: EM banks cannot be designated for link words.	CIO (see note): 000 to 511 WR: 00 to 63 HR: 00 to 99 AR: 00 to 27 DM: 0000 to 6655 EM: 0000 to 6143 **Note**: CIO indicates I/O area, IR area, and SR area.
Number of link words (setting range)	I1	0 to 500 words	0 to 128 words
	O1	0 to 500 words	0 to 128 words
	I2	0 to 500 words	0 to 128 words
	O2	0 to 500 words	0 to 128 words
		Sum of I1+I2+O1+O2 must be equal to or less than 500 words.	Sum of I1+I2+O1+O2 must be equal to or less than 128 words.

Example: Read and write part of data assigned in the above in a message.

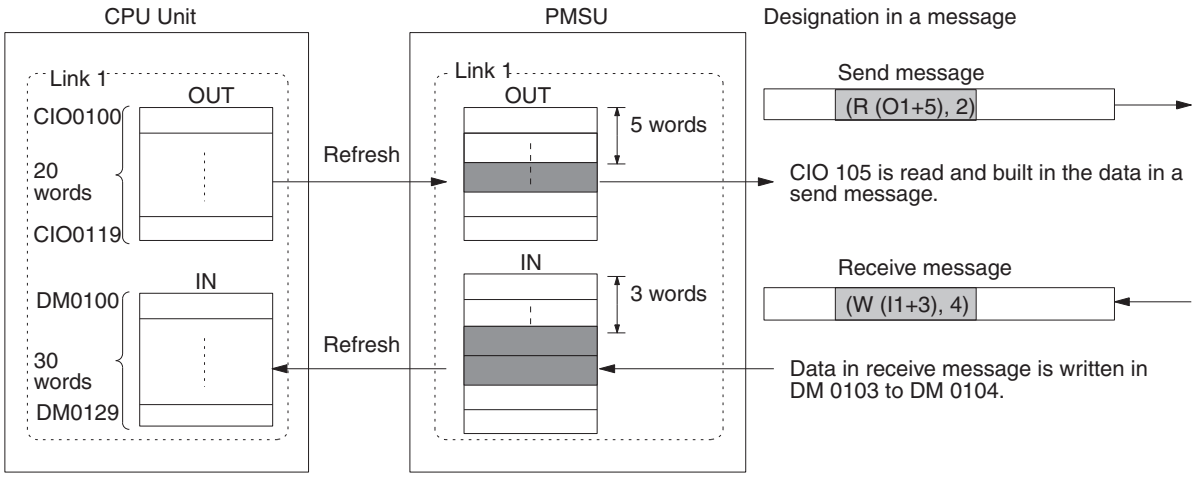

Settings (Allocation) with the CX-Protocol

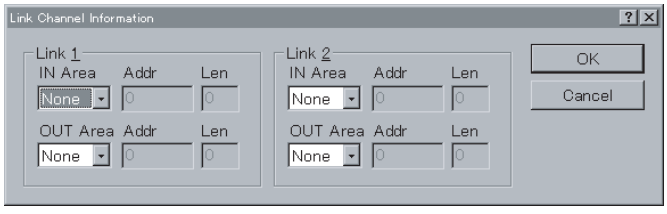

3-2-5 Response Type

The response type will be valid only when there is an operand-designated parameter in a receive message. The response type designates when to write the receive data to the I/O memory designated by the fourth operand (for CS/CJ) or third operand (for the C200HX/HG/HE) of the PMCR instruction and how to notify this write process to the CPU Unit. One of the following three methods can be used.

1,2,3... **1. Scan Notification Method**

When response writing is set to "Yes" under step attribute setting

Writes the data in the receive buffer into the I/O memory when the data is scanned (see note) for the CPU Unit after conversion. Turns OFF the PMCR Instruction Execution Flag after writing all the received data into the I/O memory and after the sequence has terminated.

When response writing is set to "No" under step attribute setting

Received data remains in the receive buffer without performing any processing for the CPU Unit. Turns OFF the PMCR Instruction Execution Flag after the sequence has terminated.

When sequence has terminated

Writes the data in the receive buffer into the I/O memory when the data is scanned (see note) for the CPU Unit after conversion.

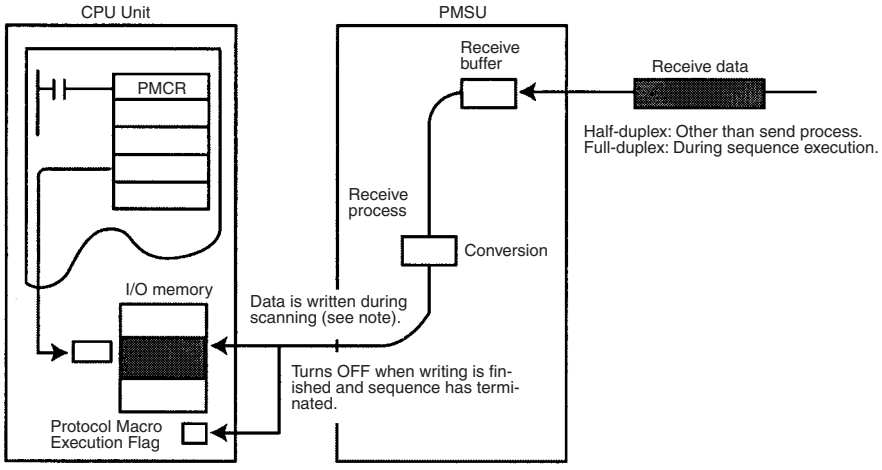

Note With the scan notification method, write timing will vary as shown below depending on the PMSU model.

Model	PLC	Write timing	
Serial Communications Unit	CS/CJ	Cyclic	Written when I/O is refreshed for the CPU Bus Unit.
Serial Communications Board			Written when I/O is refreshed for the CPU Inner Board.
Communications Board	C200HX/HG/HE	Cyclic	Written when servicing is performed for the Communications Board.

2. Interrupt Notification Method: Fixed Number

Note With the CS, this method is applicable to the Serial Communications Board and with the C200HX/HG/HE, it is applicable only to the Communications Board. It cannot be used for the Serial Communications Unit for the CS/CJ.

When response writing is set to "Yes" under step attribute setting

Writes the data in the receive buffer into the I/O memory immediately after it is converted according to the designated method. When all the data has been written into the I/O memory, an interrupt task number (external interrupt task) (for the CS) or a subroutine number (for the C200HX/HG/HE) will be designated and the interrupt task will be performed for the CPU Unit. Also, when all the data has been written into the I/O memory and when the sequence has terminated, the Protocol Macro Execution Flag will be turned OFF.

When response writing is set to "No" under step attribute setting

Interrupt process for the CPU Unit will take place when the notification is received. The received data will remain in the receive buffer without performing any write process for the CPU Unit. The Protocol Macro Execution Flag will be turned OFF after the sequence has terminated.

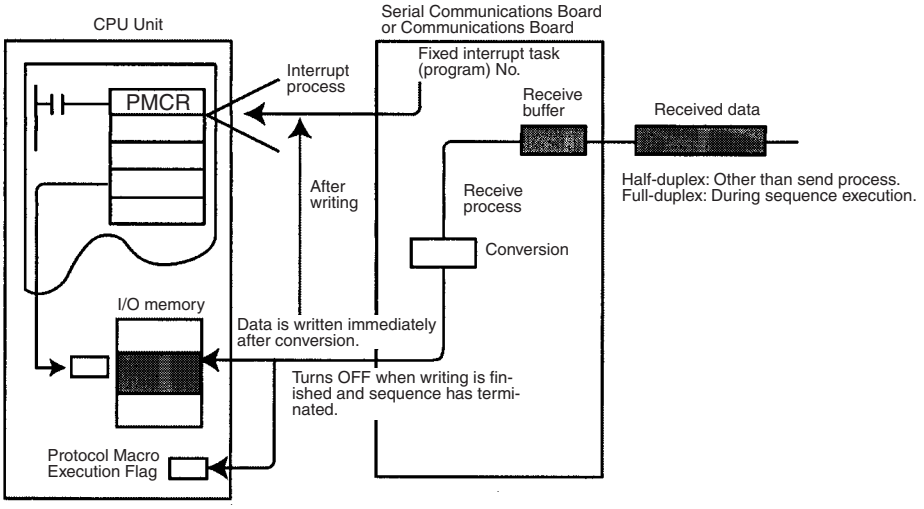

Note With the CS-series (Serial Communications Board), received data cannot be stored in the EM area using the interrupt notification. If this is attempted, a protocol macro syntax error (A42410) will occur.

3. Interrupt Notification Method: Receive Case Number

Note With the CS, this method is applicable to the Serial Communications Board and with the C200HX/HG/HE, it is applicable only to the Communications Board. For the CS/CJ, it cannot be used for the Serial Communications Unit.

When response writing is set to "Yes" under step attribute setting

Writes the data in the receive buffer into the I/O memory immediately after it is converted according to the designated method. When all the data has been written into the I/O memory, the external interrupt task number (for the CS/CJ) or the subroutine number (for the C200HX/HG/HE) will be calculated based on the step number executed according to the following procedure and the case number, and the interrupt task will then be performed for the CPU Unit. Also, when all the data has been written into the I/O memory and when the sequence has terminated, the Protocol Macro Execution Flag will be turned OFF.

When response writing is set to "No" under step attribute setting

Interrupt process for the CPU Unit will take place when the notification is received. Received data will remain in the receive buffer without performing any write process for the CPU Unit. The Protocol Macro Execution Flag will be turned OFF after the sequence has terminated.

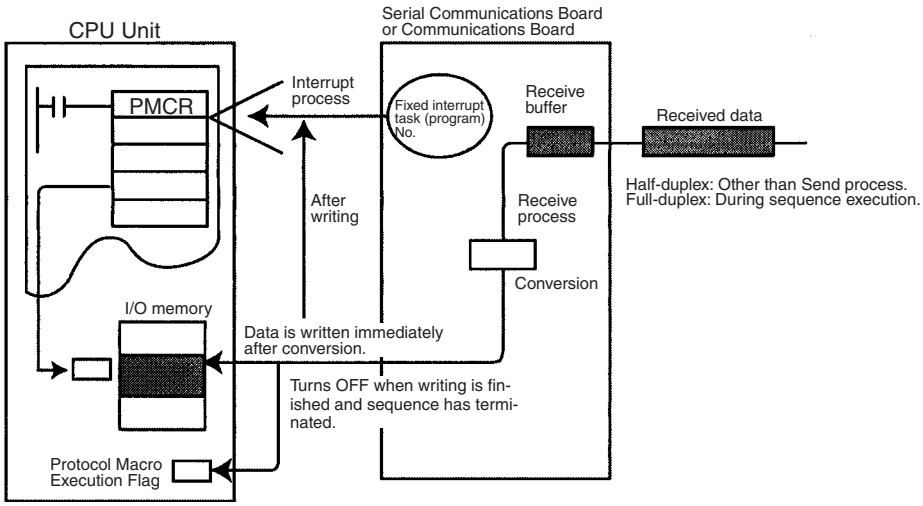

Interrupt task number (for CS/CJ) or Subroutine number (for C200HX/HG/HE) = □□

- □□ XX (hexadecimal)
  - When using a matrix: Case number of the matrix
  - Otherwise: 0
- □ Step number of the sequence that was executed

Note With the CS-series (Serial Communications Board), received data cannot be stored in the EM area using the interrupt notification. If this is attempted, a protocol macro syntax error (A42410) will occur.

Example: When the step No. = 2 and the matrix case No. = 11 (hexadecimal):

Interrupt task (subroutine) No. = 2B (hexadecimal) = 43 (decimal)

Note With the CS/CJ, the interrupt task (external interrupt task) with the task number assigned according to calculation will be performed. With the C200HX/HG/HE, the interrupt task (external interrupt task) with the subroutine number (SBN to RET) assigned according to calculation will be performed.

Setting with the CX-Protocol

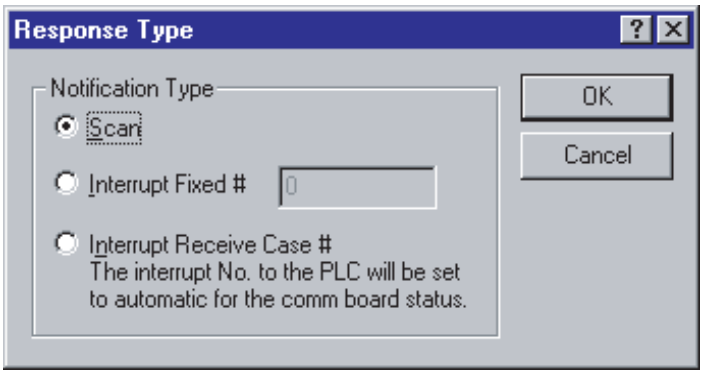

Note When an interrupt notification is used with the CS-series (Serial Communications Board), the protocol macro status area (within the interrupt data area) will not be updated completely when the interrupt notification is received. Therefore, read the receive data only after the external interrupt task conditions have been satisfied in order to ensure concurrent data processing.
The PMCR instruction cannot be executed within the external interrupt task

that has been started using the interrupt notification. An execution error will occur.

3-2-6 Monitoring Time

Users designate the time for monitoring the send or receive process. The following types of monitor time can be designated. However, Ts (send wait time) is omitted here because the value is set step by step.

Set the monitoring time by sequence only as described below in the shaded area.

Monitoring time	Description	Command type		
		Send	Receive	Send & Receive
Receive wait monitoring time: Tr	Monitors the time from when the receive command of the step in the sequence is recognized (receive command execution) until the first byte (header) is received. When receiving no data in the designated Tr (Note 1), the system executes the error process set in the step.	---	O	O
Receive finish monitoring time: Tfr	Monitors the time from reception of the first byte to reception of the last byte of the data in the step in the sequence. When reception does not complete in the designated Tfr (or the terminator does not come) (Note 1), the system executes the error process set in the step (Note 2).	---	O	O
Send finish monitoring time: Tfs	Monitors the time from transmission of the header to transmission of the last byte of the data. If the transmission does not end within this designated monitoring time (Note 1), the system will execute the error process set in the step.	O	---	O
Send wait time: Ts	Sets the time from when the send command of the step is recognized until the first byte is sent. For example, when sending the data over an extension line through the modem, dialing may not be successful unless there is a pause to input the telephone number after dialing 0.	O	---	O

O: Available, ---: Not available

Note 1. When a retry count of Send&Receive is set for the step, the system repeats the step up to the number of times of the retry count. If all retries fail or a time-out occurs, the system executes the appropriate error process.

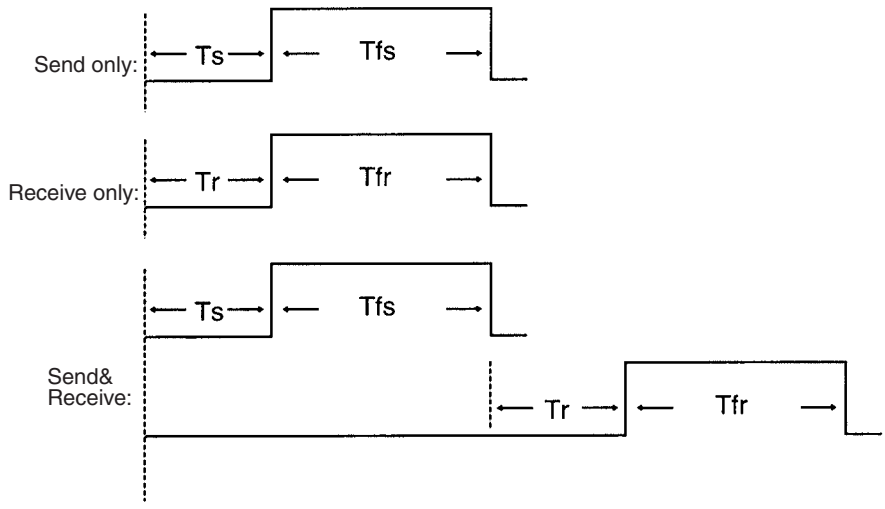

2. Be sure to set both the receive wait monitor time Tr and receive finish monitor time Tfr. With the CX-Protocol, it will not be possible to set just one of these.

Setting with the CX-Protocol

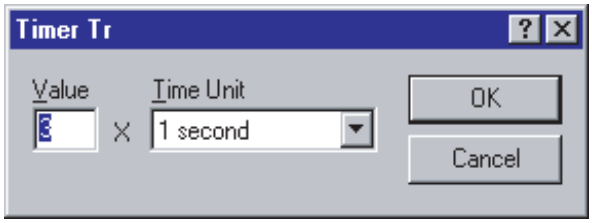

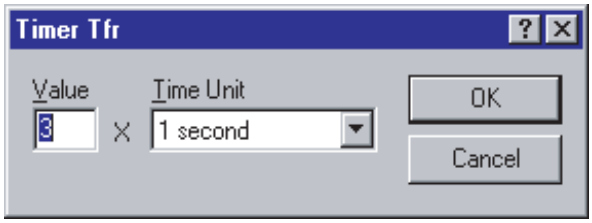

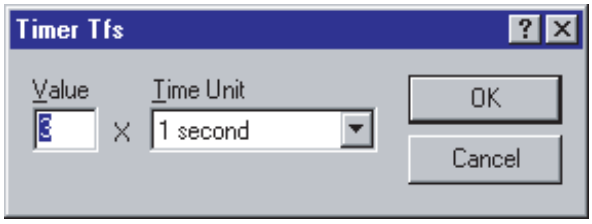

3-3 Step Attributes

Set the sequence attributes as described below.

3-3-1 CX-Protocol Setup Screen

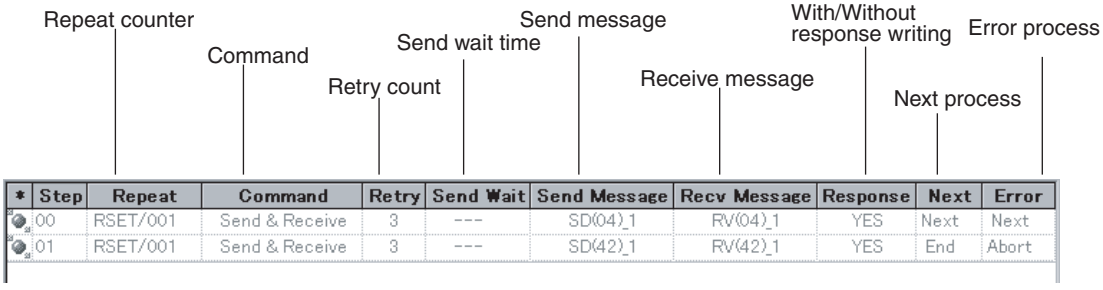

For the details of setup method, refer to *8-1 Step Setting*.

3-3-2 Setting

Parameter	Description	Remark	Command						
			Send	Receive	Send & Receive	Wait (see note)	Flush (see note)	Open (see note)	Close (see note)
Repeat counter	Sets the number of times that the step is repeated. The system increases the value of the repeat counter N at every step.	Incorporating a linear expression including the repeat counter N into the send or receive message allows users to freely change the destination of the message or the I/O memory to which the message is stored.	O	O	O	---	---	---	---
Command	Sets one of the following seven kinds of command: Send: Sends data. Receive: Receives data. Send&Receive: Sends and receives data. Wait (see note): Keeps the step on standby. (Until the Wait Clear switch is turned ON from the CPU Unit. Once the switch is turned ON, the step shifts to the next process.) Flush (see note): Clears all the data within the receive buffer. Open (see note): Turns ON the DTR signal at the desired timing. The DTR signal is held ON after the sequence has terminated and after the port is re-enabled using the STUP instruction. Close (see note): Turns OFF the DTR signal at the desired timing. Note: Only for the CS/CJ-series protocol macro.	When sending and receiving the data by consecutive turns, using the Send&Receive command allows users to set the steps efficiently. Since the retry count for an error can be set, the error process is described simply. Use the Wait command when shifting to the next step after the CPU Units completes computation between steps (see note). Use the Flush command when clearing data within the receive buffer under the full-duplex mode (see note). Use the Open or Close command when turning ON or OFF the DTR signal to match the control protocols of the external device under the modem control (see note). Note: Only for the CS/CJ-series protocol macro.	---	---	---	---	---	---	---
Retry count	Valid only for Send&Receive command. The system executes the current step up to the designated times (0-9) when some retry factor such as an error occurs. If the retry factor still remains, control will go to the error process.	During retrying, the send wait time is ignored. Therefore, the send wait time has to be provided by an error process during retrying. Likewise, a retry process has to be provided by an error process for Send or Receive command.	---	---	O	---	---	---	---

Parameter	Description	Remark	Command						
			Send	Receive	Send & Receive	Wait (see note)	Flush (see note)	Open (see note)	Close (see note)
Send wait time	Sets the wait time (Ts) as waiting time for data sending to start.	Set a send wait time when the communications partner cannot receive data immediately.	O	---	O	---	---	---	---
Send message	Sets the send message when the command is Send or Send&Receive.	With the CX-Protocol, a send message name created in the send message list is referred to or a send message is created directly in this step.	O	---	O	---	---	---	---
Receive message (including matrix)	Sets the expected receive message when the command is Receive or Send&Receive. For details refer to *3-4 Communication Message Attributes.* When setting a matrix to switch the next process according to several expected receive messages, specify the matrix name from here. For details refer to *3-5 Creating Matrices.*	With the CX-Protocol, a receive message name created in the receive message list is referred to or a receive message is created directly in this step. Or, a matrix name created in the matrix list is referred to. (The matrix cannot be created directly from the step.)	---	O	O	---	---	---	---
With/Without Response Writing (operand addressing)	Sets whether received data is to be written. Valid only when the receive data are stored using the operand addressing mode.	Setting this parameter to “available” always needs to designate the response type	---	O	O	---	---	---	---
Next process	Sets the next transit step when the step ends normally.	End: Executes the step and ends the sequence. Next: Executes the next step. Goto∗∗: Executes the step designated by ∗∗. Abort: Aborts the step and ends the sequence.	O	O	O	O	O	O	O
Error process	Sets the next transit step when the step ends abnormally.	Same as above.	O	O	O	---	---	---	---

O: Available, ---: Not available

Note The Open and Close commands turn the DTR signal ON or OFF under a control mode other than the modem control. The ON or OFF state will be retained not only after the sequence has terminated but also when the protocol has been changed through the STUP or port starting.

3-3-3 Repeat Counter

1,2,3... 1. Initial value designation

One of the following parameters can be set as the initial value in the corresponding step of the repeat counter variable N.

Reset After the repeat counter variable N is reset to 0 when the step is started, the step will be repeatedly executed by a designated number of times.

Hold When the step is started, the current value of the repeat counter variable will be held as it is, and the step will be repeatedly executed by a designated number of times.

2. Number of iterations set

The number of iteration times to repeatedly execute the step can be designated by one of the followings:

- Setting constant 1 to 255.
- Using a word read R ( )

Example) R (1) The content (binary) of the low-order byte at the word of the third operand (second operand for the C200HX/HG/HE) +1 of a PMCR instruction is designated as the number of iterations.

Example) R (DM0000) The content (binary) of the low-order byte in DM 0000 is designated as the number of iterations.

Note How to designate word read

R ( )

Start word + constant

How to designate a word	Symbol to be designated	Example	
		When constant=0	When constant=2
Operand designation	None	Cannot be set.	R(2)
Link word designation	O1,I1, O2, I2	R(O1)	R(O1 + 2)
Direct designation	CIO□□□, LR□□ (∗1), WR□□□□ (∗2), HR□□, AR□□, DM□□□□, EM□□□□: Word#	R(DM0000)	R(DM0000 + 2)

Note (∗1): C200HX/HG/HE only
(∗2): CS/CJ only

The content of the low-order byte at the start word + constant word is read as binary data to indirectly designate the number of bytes.

Note When 0 is read by the repeat counter during the word read, the step will be skipped (ignoring the next step setting) and control will shift to the next step (+1).

Setting with the CX-Protocol

- While a step is executed for the number of times set in the repeat counter, control is not shifted to the destination designated for the next process. After the step is executed the designated number of times, the control shifts to the designated destination for the next process.
- Use the repeat counter variable N for designating a send/receive message address or data enables the following:

Example: If the same send message is to be sent to multiple N-connected external Units,
include the repeat counter variable N in the send message address.

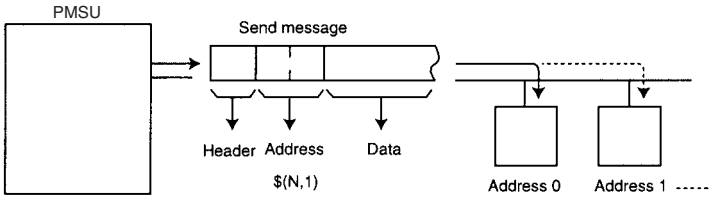

Example: If different addresses for different steps are to be designated to store receive messages, include the repeat counter variable N in the data in the receive message.

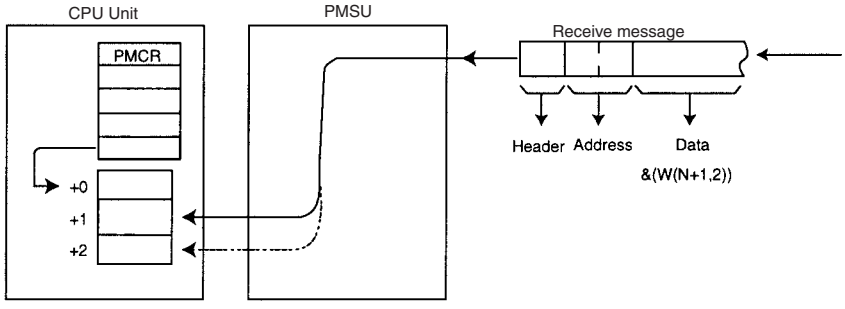

& (W(N+1),2) Two-byte receive data is converted from ASCII to hexadecimal and stored at the address of the fourth operand (third operand for the C200HX/HG/HE) designated address + (repeat counter variable N + 1) word of a PMCR instruction.

Note The repeat counter variable N will be as follows depending on the initial value setting.

(1) Reset (5 times), N = 0 to 4
(2) Hold (5 times), N= 4 to 8

For Hold, the repeat counter value updated in the previous process will be used.
The set value and process value of the repeat counter in the above examples are 0501 to 0505 for example (1) and 0501 to 0505 for example (2).

3-3-4 Commands

Set the Send, Receive, Send & Receive, Wait, Flush, Open, or Close command.

Send Sends a send message set in a step.

Receive Handles a receive message in a step or receive message in a matrix as an expected message, and receives data (note 1).

Send&Receive After sending a send message set in a step, handles the receive message set in a step or receive message in a matrix as an expected message, and receives data (note 1).

Wait Keeps the step on standby until the Wait Clear switch changes from OFF to ON. (See note 2.)

Flush Clears the data within the receive buffer. (See note 2.)

Open Turns ON the DTR signal. (See note 2.)

Close Turns OFF the DTR signal. (See note 2.)

Note

1. Compares an actually received message and set receive (expected) message, and if they match, goes to the next process. If they do not match, control is shifted to the error process for the receive message, and for the matrix, to the next process designated with “Other” (other than the set receive message group.)
2. Only for the CS/CJ protocol macro.
3. Generally, when a command is sent and a response is received, set Send&Receive.
4. Send&Receive allows retry to be designated. At retry, transmission wait cannot be applied. If a transmission wait at retry is to be applied, divide the retry into the Send step and Receive step.
5. Hold process ON (Open command) and process OFF (Close command) of the DTR signal (only for the CS/CJ protocol macro).

   The DTR signal will turn ON when a sequence execution is started. Execute the Close command to turn OFF the DTR signal at the desired timing. Execute the Open command to turn ON the DTR signal again at the desired timing. When the Open command is executed, the DTR signal will be set to ON until the Close command is executed. This ON state will continue even after one sequence is terminated and another sequence is started.

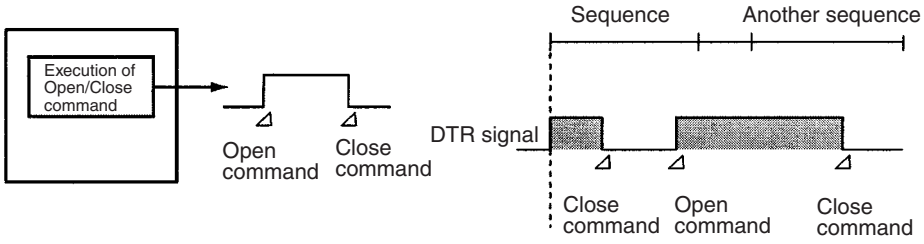

When the transmission control parameter is set to modem control for the conventional protocol macro for the C200HX/HG/HE, the DTR signal will turn ON when a sequence is started and will turn OFF when sequence execution is completed. This setting has the following problems.

- When hanging up the phone in the middle of a sequence execution via a modem, it will be necessary to send an escape code (for example: +++) and an AT command (to cut the line) to the modem. However, hanging up the phone can be performed more easily and reliably using electrical signals (without requiring a modem monitor timer).

With the CS/CJ protocol macro, the phone can now be hung up at the desired timing by turning OFF the DTR signal.

- With the conventional protocol macro for the C200HX/HG/HE, the phone line cannot be set to be active for more than one sequence.
  With the CS/CJ protocol macro, the DTR signal can be retained even after a sequence has terminated, and can be applied in the following way.

1,2,3...

1. Make a call using the protocol macro from the PLC to a host computer (Programming Device: CX-Programmer).
2. When the line is connected, change the serial communications mode from protocol macro to host link using the STUP instruction. (DTR signal is retained.)
3. Execute remote programming/monitoring from the Programming Device side.

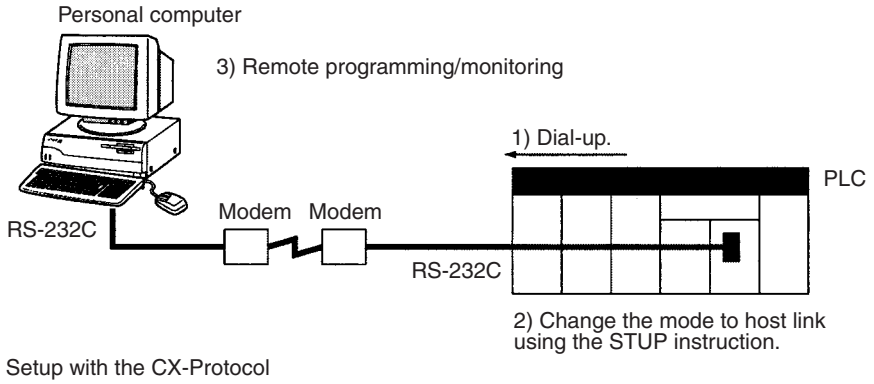

Setup with the CX-Protocol

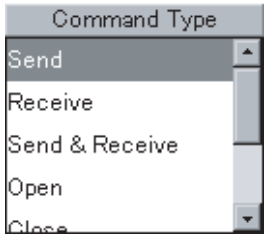

Note When set to modem control mode, the DTR signal will turn ON when the sequence is started and will turn OFF when the sequence ends. If the DTR signal is turned ON using the Open command under the modem control mode, the DTR signal will remain ON even after the sequence has ended.

3-3-5 Retry Count

When the retry count of the Send&Receive command is set, if a retry factor among the above error factors occurs, (refer to the table of error factors on the following page) the system will execute the Send&Receive command repeatedly. If this error factor still remains after the designated number of retry repetitions, the system will go to the error process.

When retrying, the system will send data regardless of the send wait time Ts.

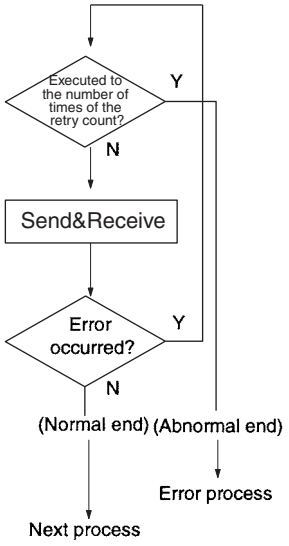

Setting with the CX-Protocol

Note To execute the retry process as an error process, it is necessary to set the steps as follows. As seen in the following, the description of the error process is more complicated than using Send&Receive commands and designating the retry count.

Example: Retrying the same process 3 times.

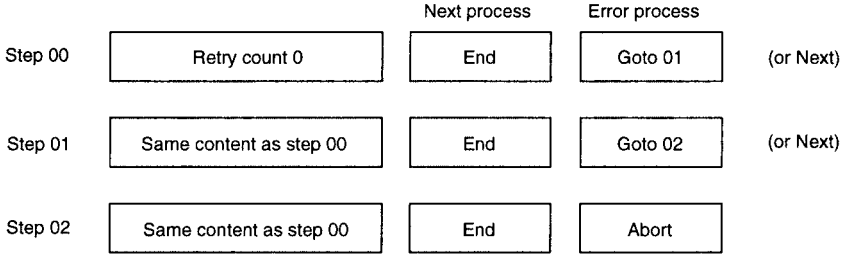

Note When both the repeat counter N and the retry count is set, the counter N will not be updated until the system executes the steps for the number of times of the retry count. The counter N will be updated when the retry factor disappears or the system has executed the steps for the number of times of the retry count.

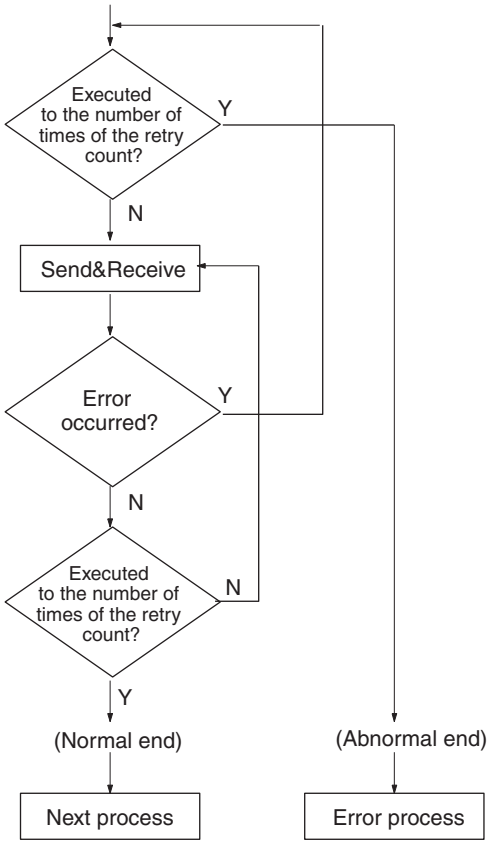

3-3-6 Send Wait Time

For the Send or Send&Receive command, set the wait time taken from the corresponding step up to data transmission.

Screen with the CX-Protocol

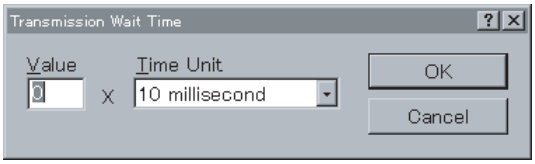

3-3-7 Send Message/Receive Message

Send Messages

A send message name created in the send message list is referred to or a send message is created directly in this step. For details about the contents of send messages, refer to *3-4 Communication Message Attributes*.

Receive Messages (Including Matrix)

A receive message name created in the receive message list is referred to or a receive message is created directly in this step. For details about the contents of send messages, refer to *3-4 Communication Message Attributes.*

A matrix name (indicated with brackets) created in the matrix list. is referred to. For details about the contents of send messages, refer to the following *3-5 Creating Matrices*.

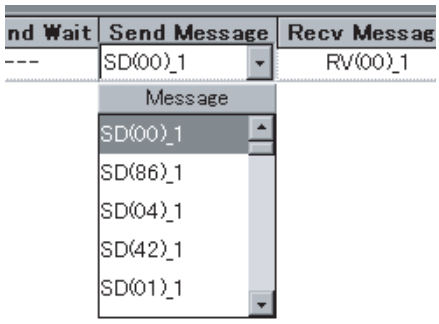

3-3-8 With/Without Response Writing

Sets whether or not received data is written.

This setting is valid when the data in a receive message is designated with a variable and the first word address is operand-designated.

If it is set to **Yes**, the data in the receive buffer will be written into the I/O memory according to the response type designated in the sequence attribute (scan notification, interrupt notification: fixed number, or interrupt notification: receive case number) and a notification of data reception will be issued to the CPU Unit.

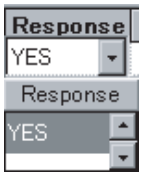

3-3-9 Next Process/Error Process

When a step is normally or abnormally terminated, set which step control it will be shifted to.

When a matrix is designated as a receive message, the above setting is invalid, and the next process designated with the matrix is valid.

Goto** After execution of the step, shift to the designated step ∗∗ (0 to 15).

Next After execution of the step, shift to the next (+1) step.

End After execution of the step, terminate the entire sequence including the step.

Abort If an error factor occurs during execution of the step, interrupt the execution of the step and terminate the entire sequence including the step.

Setting with the CX-Protocol

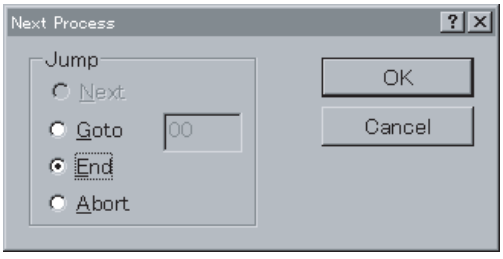

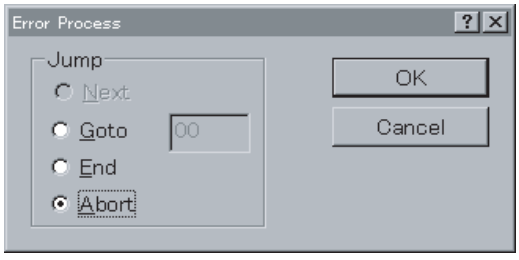

When one of the following error factors occurs, the step ends abnormally, and then the system goes to the appropriate error process.

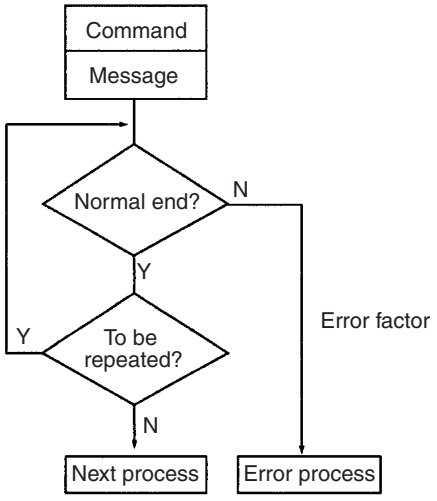

Errors		Command type			When retry is designated.
		Send	Receive	Send & Receive	
The Message that was received is not the same as the expected receive message.		---	O	O	Step is retried.
Monitoring time expired	The data (or header) are not received within “receive wait monitoring time.”	---	O	O	
	Data receiving is not finished within “receive finish monitoring time.”	---	O	O	
	Data sending is not finished within “send finish monitoring time.”	O	---	O	
A transmission error occurs during data receiving. For the CS/CJ, an overrun/framing/parity error occurs for the transmission error occurrence status. (Words +8/+19) (bits 02 to 04 are set to “ON”) For the C200HX/HG/HE, the Communication Error Flag 28304 or 28312 is set to “ON.”		---	O	O	
An error is detected in error check code.		---	O	O	
Received data size exceeds the area for the designated area during the writing of data to or reading of data from the CPU Unit. For the CS/CJ, data read/write area error (error code 3) is stored in the error code (bits 00 to 03) indicating the port operating status (words +9/+19) of the protocol. For the C200HX/HG/HE, data read/write are error (error code 3) is stored in the error code. (Word 256, bits 8 to 11 (port A) and bits 12 to 15 (port B))		---	O	O	Step is not retried.

Note In case of the Wait, Flush, Open, or Close command, the error will not occur during execution.

3-4 Communication Message Attributes

The communication message contains six items: header, address, length, data, error check code, and terminator.

Header	Address	Length	Data	Check code	Terminator

Parameter	Description	Data attributes
Header	Sets the data that indicates the beginning of the communications message frame. At reception, data from the header is received as the message.	Constant only
Address	Sets the unit number or other information to be used as the message's destination. • The system identifies whether the receiving data is addressed to itself. • When "Word writes" or "Wildcard" is set as a data attribute, the system receives all the messages addressed to itself without identifying whether it is addressed to itself (broadcast addressing). • The message sending address can automatically be updated by using the repeat counter.	Constant (Reserved characters are not available.) Variable
Length	• Indicates the length (number of bytes) of a message. Based on the calculation method set at transmission (length size/data format), calculates message length and appends the value before sending. • When the message is received, the amount of data corresponding to this value for the length is taken from the actual received data and processed as the receive message. (Checking of this value is not supported by C200HX/HG/HE.)	Automatic variable
Data	• For sending messages Set the data to be sent. • For receiving messages Set the data expected to be received. When the data of the actually received message frame is different from the designated data, the system executes the error process. The received data can be written to the I/O area of the CPU Unit.	Constant Variable
Error check code	• At the send process, the check code of the send message frame is automatically calculated according to the setup, and appended to the message frame to be sent. • At receive process, error checking that compares the check code received with the check code locally calculated from the received data is executed. • When both check codes are different, the control will go to the error process.	Automatic variable (LRC, LRC2*1, SUM, SUM1*1, SUM2, CRC-CCITT, CRC-16, or No-Check) *1: Only for CS/CJ protocol macro
Terminator	Marks the end of a message frame. • When sending a message, the system will finish a frame of the message sending after it sends the terminator. If the terminator is not set, the system will finish the sending when it sends the data set at the end of the send message. • When receiving a message, the system will finish receiving when it receives the terminator. If the terminator is not set, the system will finish the receiving when it receives the data set at the end of the receive message. • If the number of bytes of data set at the end of the receive message is "Wildcard," the system will finish receiving when the buffer becomes full (CS/CJ: 2,500 bytes, C200HX/HG/HE: 256 bytes). However, if flow control (X-on/X-off, RTS/CTS) is set, the system will send the X-off code when the buffer is filled to 75% (CS/CJ: 2,000 bytes, C200HX/HG/HE: 200 bytes) and finishes receiving.	Constant only

Note The above six items can be eliminated in the following cases:
Sending: The header, the address, the length, the error check code, and the terminator can be eliminated.
Receiving: If the terminator exists, the header, the address, the length, and the error check code can be eliminated. If the data length is fixed, the terminator can be eliminated as well.

3-4-1 CX-Protocol Setup Screen

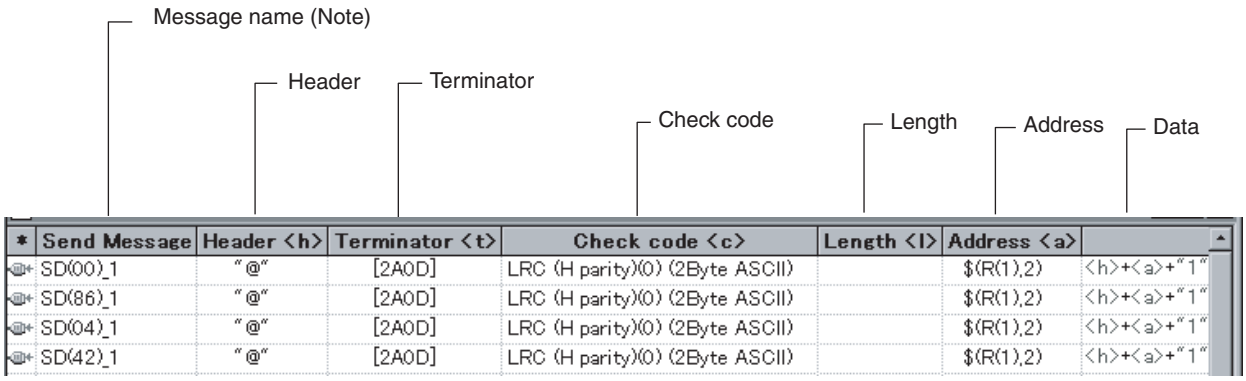

*	Send Message	Header <h>	Terminator <t>	Check code <c>	Length <l>	Address <a>	
	SD(00)_1	"@"	[2A0D]	LRC (H parity)(0) (2Byte ASCII)		$(R(1),2)	<h>+<a>+"1"
	SD(86)_1	"@"	[2A0D]	LRC (H parity)(0) (2Byte ASCII)		$(R(1),2)	<h>+<a>+"1"
	SD(04)_1	"@"	[2A0D]	LRC (H parity)(0) (2Byte ASCII)		$(R(1),2)	<h>+<a>+"1"
	SD(42)_1	"@"	[2A0D]	LRC (H parity)(0) (2Byte ASCII)		$(R(1),2)	<h>+<a>+"1"

For the details of setup method, refer to the *SECTION 9 Setting and Editing Messages and Matrix Lists*.

Note After the creation of communication message, users can create steps by designating the message name.

3-4-2 Header

Indicates the beginning of a message. Only a constant can be designated.

Selects the message type (ASCII, hexadecimal, control code), and enters data.

Example: Type: ASCII, data: @ (screen display: "@")

3-4-3 Address

Designate the address when a message is subjected to 1:N communications. A constant or variable can be designated. Using the repeat counter variable N for the variable can change the address for each sending and receiving.

Select the address type (constant, variable), and enter data.

Example: Type: variable, conversion: none, data: (R(1),2) (screen display: (R(1),2))

3-4-4 Length

Sending (Common to C200HX/HG/HE and CS/CJ)

Upon sending, calculations are automatically performed for the message item corresponding to the length itself, and adds the item. Unit: Number of bytes. It is possible to set the range for the item to be calculated.

Receiving

Protocol Macro for C200HX/HG/HE

This length data is not checked upon reception.

Designate the length size (one byte, two bytes), data type (ASCII, binary) according to the communications designation of the device at the communications partner.

Example: 1 byte, binary, initial value: 0 (screen display: (0) (1 Byte BIN))

Note The length calculation range is set in the **Message Editor** dialog.

Protocol Macro for CS/CJ

This length data is checked upon reception.

If there is no terminator designation, an amount of message items corresponding to the length (number of bytes) set in the expected message will be

extracted from the receive buffer and processed as the receive message.
If there is a terminator designation, data up to the terminator will be received as the receive message and a comparison will be made to check that the length of this message matches the value for the length in the expected message.

Note Even if there is no designation for the header, it is possible to take the message item out of the receive buffer if the length or the terminator is designated, and process it as the receive message.

Length designation for the CS/CJ operates in the following way.

Example: If the received message is <h>+<l>+(W(1),∗), the data size of (W(1),∗) will be determined by the value of <l> in the expected message following <h>, and the data will be received as the receive message.

Note A comparison error may occur as the result of an ASCII conversion error for <l>.

Example: If the received message is <h>+<l>+(W(1),∗)+<t> and the range between <h> and <t> has been recognized as the receive message, a comparison will be made between the value of <l> in the expected message and the data size of the actually received (W(1),∗).

Note A comparison error or a data size comparison error may occur as the result of an ASCII conversion error for <l>.

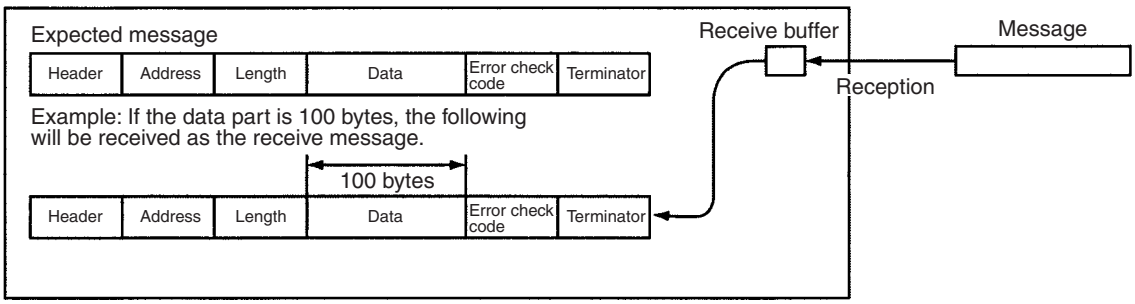

3-4-5 Data

At sending, designate data to be sent. At reception, designate expected data.

A constant or variable can be designated. A constant and a variable can be combined as a string.

Designating a variable allows the I/O memory word data to be used as part of data (at sending: read, at reception: write). Furthermore, using the repeat counter variable N for the variable allows data to be changed for each send and receive.

Select the data type (constant, variable), and enter data.

Example: Type: Constant (ASCII), data: RX0
Type: Variable (hexadecimal), data: &(N,R (1))
Type: Constant (ASCII), data: 00

↓

(Screen display: “RX0” + &(N,R(1)) + “00”)

3-4-6 Error Check Code

Designate the error check code when data is sent.

LRC, LRC2, CRC-CCITT, CRC-16, SUM (1-byte/2-byte), SUM1 (1-byte/ 2-byte), and SUM2 (1-byte/2-byte) can be designated. As the data type, BIN or ASCII can be selected. The data size, default, and swap between high byte and low byte can be designated.

Example: Type: LRC, data type: ASCII, data size; 2 bytes, initial value: 0 (screen display): LRC (H parity) (0) (2 Byte ASCII)

Note
1. The error check code range is set in the **Message Editor** dialog.
2. SUM2, CRC-16, and swap between high byte and low byte are possible for the C200HX/HG/HE only when the Communications Board is the C200HW-COM□□-EV1. For the CS/CJ, they are possible with any PMSU, and SUM1 (1 byte, 2 bytes) and LRC2 are also possible.

3-4-7 Terminator

With reception of this code, data reception is completed. (When data is received without this code, data reception will be completed when the data that corresponds to the length of the message set in the reception message inside the step is received.)

With sending of this code, data sending is completed. (When data is sent without this code, data sending is completed at the time when the last data is sent.)

Only a constant can be designated.

Select the terminator type (ASCII, hexadecimal, control code) according to the communications specification of the device of the communication partner, and enter the data.

Example: Type: hexadecimal, data: 2A0D (screen display [2A0D])

Note Even if there is no designation for the header, it is possible to take the message item out of the receive buffer if the length or the terminator is designated, and process it as the receive message.

3-4-8 Message Item Data Attributes

Users can set the following constants or variables as message items.

Constant

Can be set for the header, address, data, or terminator.

Constant	Designating method	Examples
ASCII data	Designate between double quotation marks, as in “12345.”	“12345”
Hexadecimal data	Designate between square brackets as in [5A2B].	[5A2B]
Control code	Designate by selecting the special code from the list, such as CR, LF, or STX.	[OD] for CR

Variable

Can be set for the address or data.

Variables read from and write to the I/O memory of PLC, and utilize repeat counter variables.

1. Format

Designate in the form of (X, Y).

X: Effective address

Designates where to read from or write to in the I/O memory, the linear expression including N, or the wildcard. One of the following can be used to designate items.

a) Both the read/write options and the first word + (the linear expression including N)

b) Linear expression including N.

c) Wildcard (∗)

Note Wildcard can be designated only in the receive message.

Y: Data size (CS/CJ: 1 to 1000, C200HX/HG/HE: 1 to 255)

Designates the number of bytes to read or to write, when the data are not converted. (Designates 1 when reading the value of N.)

Designates the number of bytes on the transmission, when the data are converted. The number of bytes on I/O memory are as follows.

Option	Data size on the I/O memory	
	$ (Hexadecimal→ASCII)	**& (ASCII→Hexadecimal)**
R (Read from the PLC→Send)	Y/2 bytes	Y x 2 bytes
W (Receive→Write to the PLC)	Y x 2 bytes	Y/2 bytes

One of the following can be used for designate items.

1,2,3...

1. Linear expression including N.
2. Wildcard (∗)

   Note Wildcard can be designated only in the receive message.
3. Both the read option and first word + (the linear expression including N) when using C200HX/HG/HE-series PLCs.

   Note Reads bits 0 to 11 of the word as 3-digit BCD. When using CS/CJ-series PLCs, the bits are read as binary data.

There are three types of variables as shown below. For each variable, users can set the attribute which designates the direction (forward or reverse direction) to read or to write the data to be converted.

Note

1. ASCII Data Conversion, Hexadecimal Data Conversion:
   When ASCII data conversion is performed, the designated data is read as Hex (hexadecimal) data and each digit is converted to its ASCII code number. Consequently, the size of the data will be double that before conversion.
   When Hex data conversion is performed, the designated data is read as ASCII data and each byte of the data is converted to a hexadecimal value. Consequently, the size of the data will be half that before conversion.
   The specifications for the conversion vary with the designated data, read/write designations, and direction designations. For conversion examples, refer to page 105.

Variable	Read/write direction		Function	
	Forward	**Reverse**	**Read**	**Write**
Unconverted variable	(X, Y)	~ (X, Y)	Y bytes of data from the address designated by X are processed without conversion.	
Variable converted to ASCII	$(X, Y)	$~ (X, Y)	Y/2 bytes of hexadecimal data from the address designated by X are converted to Y bytes of ASCII data.	Y bytes of hexadecimal data is converted into ASCII data equivalent to Y∗2 bytes before storage with the address designated by X as the beginning.
Variable converted to hexadecimal	& (X, Y)	&~ (X, Y)	Y∗2 bytes of ASCII data from the address designated by X are converted to Y bytes of hexadecimal data.	Y bytes of ASCII data is converted into hexadecimal data equivalent to Y/2 bytes before storage with the address designated by X as the beginning.

Variable Format

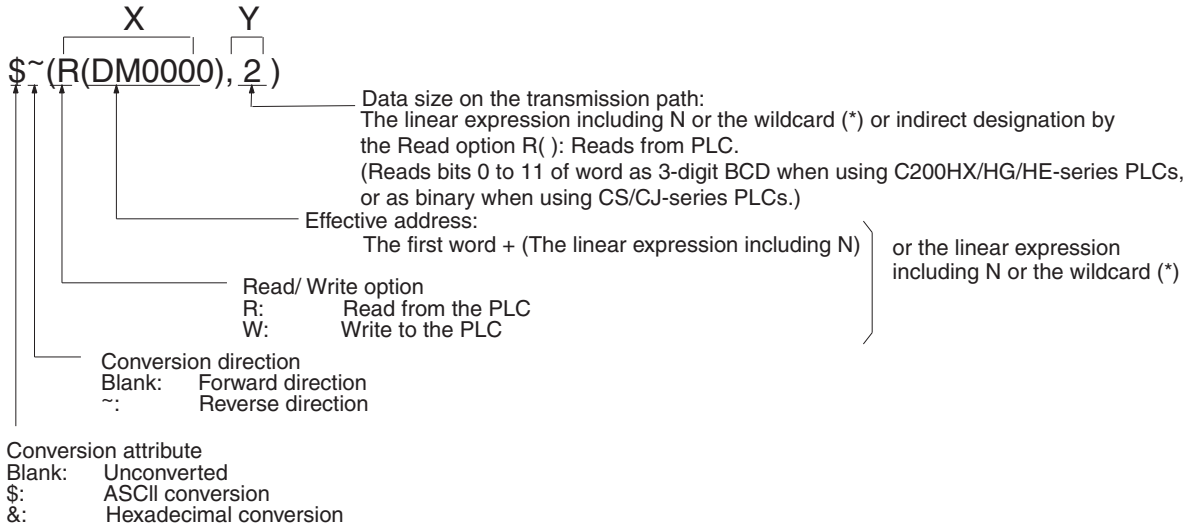

Note 1. How to designate a word.

How to designate a word	Symbol to be designated	Example	
		When linear expression including N=0	When linear expression including N=2N+1
Operand designation	None	Cannot be set.	R(2N+1)
Link word designation	O1, I1, O2, I2	R(O1)	R(O1+2N+1)
Direct designation	CIO□□□, WR□□□□ (note 2), LR□□ (note 3), HR□□, AR□□, DM□□□□, EM□□□ □: Word #	R(DM0000)	R(DM0000+2N+1)

2. For CS/CJ.
3. For C200HX/HG/HE.

Note For converted variables:

When the frame format of instructions (commands) that the partner Unit can translate is configured by ASCII code, the numeric hexadecimal data in the I/O memory has to be converted to hexadecimal data by $(,) before it is sent, and the numeric ASCII data has to be converted to hexadecimal data by &(,) before it is received.

When converting data (hexadecimal data) in the I/O memory into ASCII code before sending

Example: Convert a 6-digit numeric value (3 bytes in the I/O memory) for DM 0000 into ASCII in the reverse direction

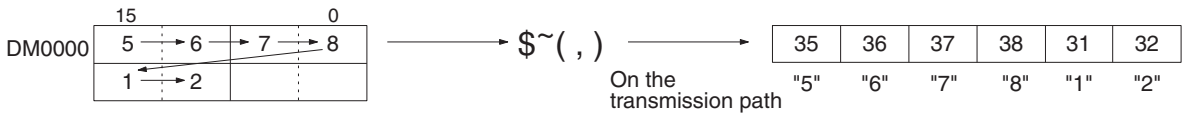

How to designate: $ ~ (R (DM0000) 6)

- Number of bytes in the transmission path (after ASCII conversion)
- Read from DM0000
- Reverse direction
- Hexadecimal → ASCII conversion

When converting the numeric data (ASCII data) from the external device into the hexadecimal data and receiving and writing it

Example: Converting a 5-digit numeric data (5 bytes in ASCII data) into hexadecimal, and writing it from DM 0000 in the reverse direction.

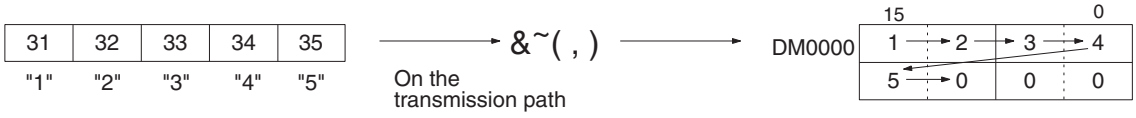

How to designate: &~ (W (DM0000), 5)

- Number of bytes in the transmission path
- Read from DM0000
- Reverse direction
- ASCII → Hexadecimal conversion

Users can set the following contents on the X and Y of variable (X,Y).

2. Contents of X and Y

How to set X and Y				Specification	Example	Items available			
						Send		Receive	
						Address	Data	Address	Data
How to set X	Reading/ writing the I/O memory	Word reading	Operand addressing	R (z) First word + (Linear expression including N) Read option Read from the first word + (yN + x) word	(R (1),1) The system reads one byte from the third operand (for CS/CJ) or second operand (for C200HX/HG/HE) of the PMCR instruction + 1 location to send it with no conversion.	O	O	O	O
			Link word addressing		$(R(O1+5),2) The system reads 2 bytes from the 5th word in the link word's output area 1to send it with conversion to ASCII form.	O	O	O	O
			Direct addressing		$(R(DM0000),3) The system reads 3 bytes from DM 0000 to send it with conversion to ASCII form.	O	O	O	O
	Reading/ writing the I/O memory	Word writing	Operand addressing	W (z) First word + (Linear expression including N) Write option Read from the first word + (yN + x) word	(W(1),1) The system writes one byte of receive data to the (fourth operand of the PMCR instruction + 1)th word (for CS/CJ) or the (third operand of the PMCR instruction +1)th word (for C200HX/ HG/HE) with no conversion.	---	O	---	O
			Link word addressing		&(W(I1+5),2) The system writes 2 bytes of receive data to the input area 1 of the link word's 5th word with hexadecimal conversion.	---	O	---	O
			Direct addressing		&(W(LR0060),3) The system writes 3 bytes of receive data to LR0060 with conversion to hexadecimal form.	---	O	---	O

How to set X and Y		Specification	Example	Items available			
				Send		Receive	
				Address	Data	Address	Data
How to set X	Wildcard	Can be set only in the address part or data part of the receive message. • Setting the wildcard in the address part: The system receives all the messages without checking the address data. • Setting the wildcard in the data part: The system receives all data without checking the received data.	With (*, 2) designated in the address part, 2 bytes can be received from any address. With (*, 5) designated in the address part, 5 bytes can be received from any address.	---	O	---	O
	N (repeat counter)	N	(N, 1) repeat counter value	O	O	O	O
How to set Y	Linear expression including N (repeat counter)	yN + x Constant. Sets the number of bytes (1-255). Repeat counter value Coefficient (0-255).	$(R(1),2) The system repeatedly reads 2 bytes starting at word No. (third operand of the PMCR instruction + 1) (for CS/CJ) or word No. (second operand of the PMCR instruction + 1) (for C200HX/HG/HE) to send as ASCII.	O	O	O	O
	Wildcard	Can be set only in the data part of the receive message. Setting the wildcard in the data part The system receives all the messages without checking the received data. However, if x is a linear expression including N, this setting is not possible.	&(W(1),*) The system receives data from the fourth operand (for CS/CJ) or the third operand (for C200HX/HG/HE) of the PMCR instruction + 1 to store it with conversion to hexadecimal form regardless of the length.	---	O	---	O

How to set X and Y				Specification	Example	Items available			
						Send		Receive	
						Address	Data	Address	Data
How to set Y	I/O Word read	Channel read	Operand designation	R (z) First word + (linear expression including N) Read option The content of the low-order byte of the first word + (yN + x) word is read as a binary value and handled as a byte.	(*,R(1)): Set in receive data. Any receive data is received by the number of bytes of the contents word + 1 word designated using the third operand (for CS/CJ) or the second operand (for C200HX/HG/HE).	O	O	O	O
			Link word		(R(1) , R(O1): Set in send data. Data is sent by the number of bytes of the contents of the first word at the link word output area 1 from word + 1 word designated with the third operand (for CS/CJ) or the second operand (for C200HX/HG/HE) of a PMCR instruction.	O	O	O	O
			Direct		(R (DM0000), R (DM0100)): Set in send data. Data starting from DM0000 and corresponding to the number of bytes set in DM0100 is sent.	O	O	O	O

Examples of the Variable

Reading from CPU Unit to PMSU.

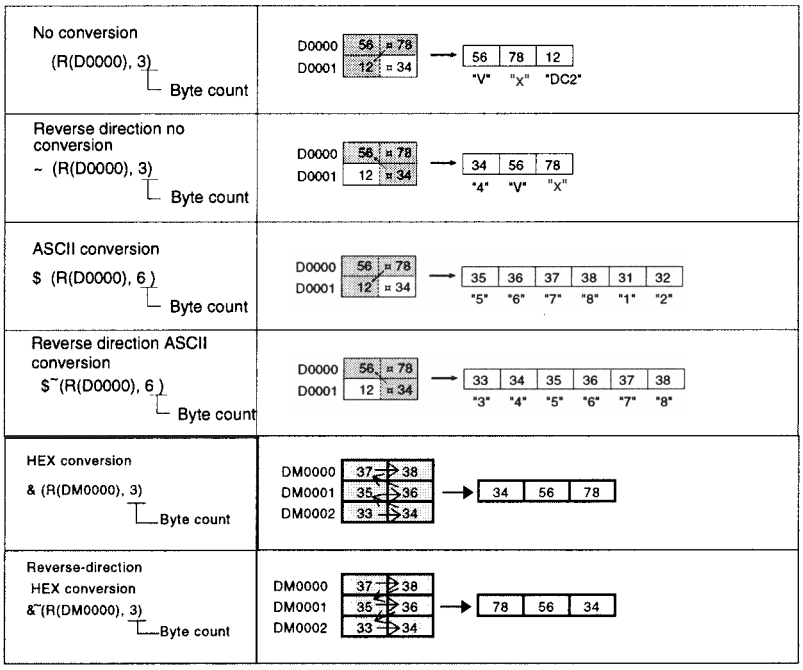

Writing from PMSU to CPU Unit

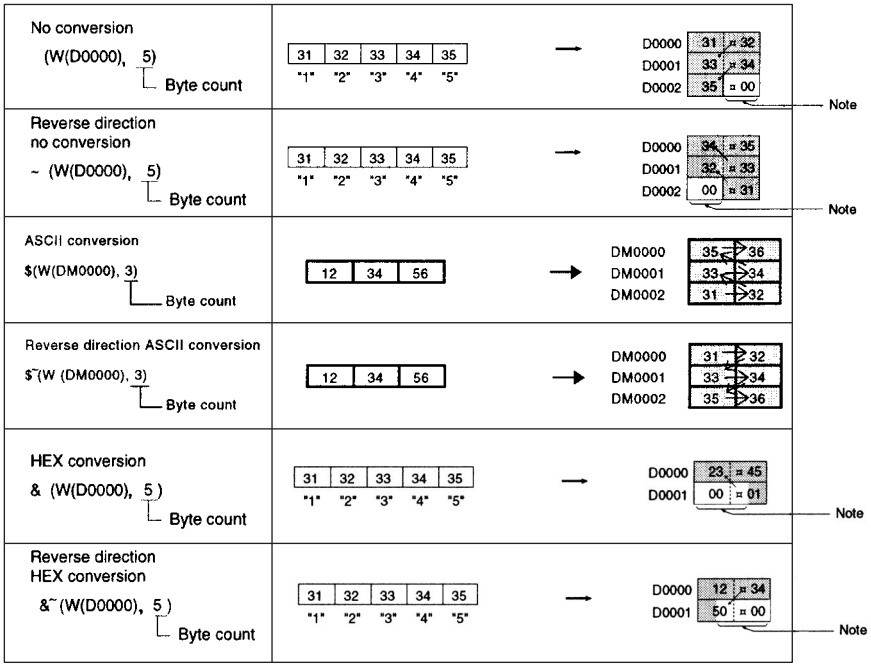

Note "0" is stored in an empty bit in a word whose write data is less than 16 when writing to the CPU Unit.

When the receive data has variable length, use the wildcard (*).

No conversion (W(DM0000), *)	31 32 33 34 35 36 37 → 31→32, 33→34, 35→36, 37 00 (Note) "1" "2" "3" "4" "5" "6" "7" The system stores all the data that were received on DM0000 and after.
HEX conversion & (W(DM0000), *)	31 32 33 34 35 36 37 → DM0000 45→67, DM0001 01→23 (Note) "1" "2" "3" "4" "5" "6" "7"
No conversion (*, 5)	The system reads 5 bytes of data to discard them. Use when data need not to be stored in the relay area and no error ispermissdle for anydata contents.

When converting to hexadecimal, convert data other than numerical data in the following way:

- The negative sign (–) is recognized as a minus value and the highest digit is stored as F hexadecimal.
- The decimal point is ignored when the data is stored.
- Symbols and characters other than 0 to F are stored as 0 hexadecimal.

Receive data string (Example)	Variable (ASCII to hexadecimal conversion)	After conversion
HEX: 2D 31 32 33 34 35 ASCII: – 1 2 3 4 5	& (W(DM000,6)	DM0000 23 45 DM0001 F0 01
HEX: 31 32 33 2E 34 35 ASCII: 1 2 3 . 4 5		DM0000 23 45 DM0001 00 01
HEX: 31 2F 33 34 35 36 ASCII: 1 / 3 4 G 6		DM0000 34 06 DM0001 00 10

When converting from hexadecimal, convert data other than numerical data in the following way:

- The negative sign (–) is treated as a symbol and stored as 0 hexadecimal.
- The decimal point is ignored when the data is stored.

Symbols and characters other than 0 to F are stored as 0 hexadecimal.

Receive data string (Example)	Variable (ASCII to hexadecimal conversion)	After conversion
HEX: 2D 31 32 33 34 35 ASCII: – 1 2 3 4 5	&~ (W(DM000,6)	DM0000 01 23 DM0001 45 00
HEX: 31 32 33 2E 34 35 ASCII: 1 2 3 . 4 5		DM0000 12 34 DM0001 50 00
HEX: 31 2F 33 34 35 36 ASCII: 1 / 3 4 G 6		DM0000 10 34 DM0001 06 00

Note Error Check Code

For protocol macros, the following 8 types of check code can be set:

Calculation method	Data type		Reverse direction (see note 1)	Initial value
LRC (see note 2)	BIN	1 byte	Unavailable	0-255
	ASCII	2 byte (see note 2)	Available	

Calculation method	Data type		Reverse direction (see note 1)	Initial value
Sum (1 byte)	BIN	1 byte	Unavailable	0-255
	ASCII	2 byte	Available	
Sum (2 bytes)	BIN	2 byte	Available	0-65535
	ASCII	4 byte	Available	
Sum2 (1 byte)	BIN	1 byte	Unavailable	0-255
	ASCII	2 byte	Available	
Sum2 (2 bytes)	BIN	2 byte	Available	0-65535
	ASCII	4 byte	Available	
CRC-CCITT	BIN	2 byte	Available	---
	ASCII	4 byte	Available	
CRC-16	BIN	2 byte	Available	0-65535
	ASCII	4 byte	Available	
LRC2 (see note 3)	BIN	1 byte	Unavailable	0-255
	ASCII	2 byte	Available	
SUM1 (see note 3) (1 byte)	BIN	1 byte	Unavailable	0-255
	ASCII	2 byte	Available	
SUM1 (see note 3) (2 bytes)	BIN	2 byte	Available	0-65535
	ASCII	4 byte	Available	

Note

1. Swap between high byte and low byte of the error check code is possible for CS/CJ, and is also possible for C200HX/HG/HE when the Communications Board is the C200HW-COM□□-EV1.
2. The host link (SYSMAC WAY) uses an error check code: LRC ASCII 2-byte (sequential direction).
3. With CS/CJ protocol macro.

Calculation Examples

The following message items are used to calculate the check code when the initial value is 0.

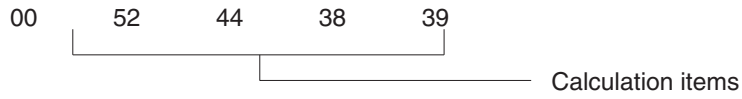

1,2,3...

1. LRC (Longitudinal Redundancy Check)

   This mode calculates the exclusive OR (XOR) of the characters of a set of data to create a check code.

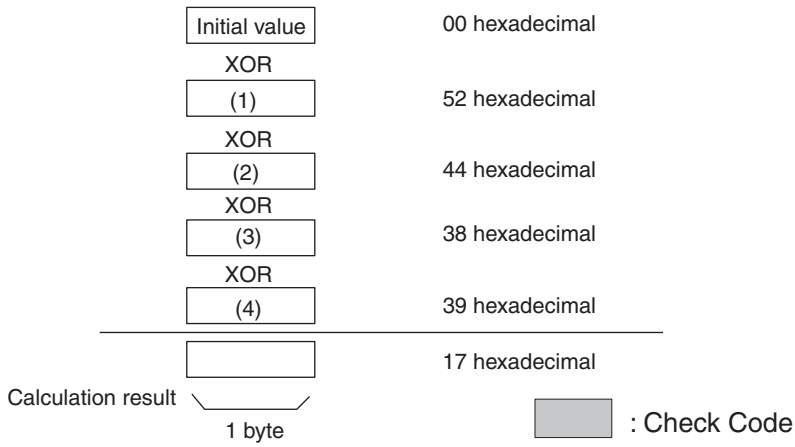

LRC 2byte ASCII	00 52 44 38 39 31 37 0D
LRC 2byte ASCII	00 52 44 38 39 37 31 0D
LRC 1byte ASCII	00 52 44 38 39 17 0D

Note LCR2 is the 2's complement of the LCR calculation result.

2. SUM

This mode adds arithmetically the characters of a set of data to create a check code. Users can designate either of the directions for storing the SUM, as with variables.

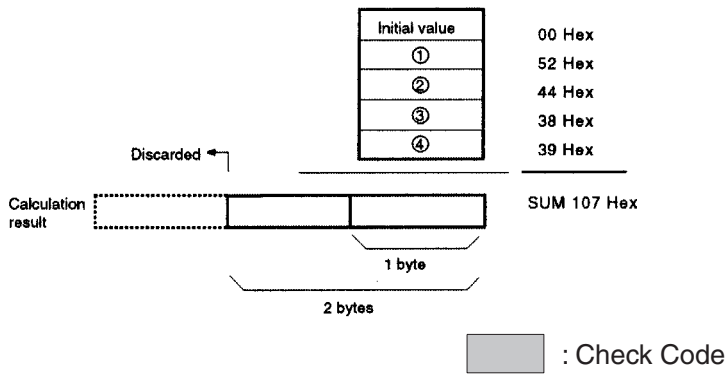

SUM (1 byte) ASCII 2byte	00 52 44 38 39 30 37 0D
SUM (2 byte) ASCII 4byte	00 52 44 38 39 30 31 30 37 0D
SUM (1 byte) BIN 1byte	00 52 44 38 39 07 0D
SUM (2 byte) BIN 2byte	00 52 44 38 39 01 07 0D
~SUM (1 byte) ASCII 2byte	00 52 44 38 39 37 30 0D
~SUM (2 byte) ASCII 4byte	00 52 44 38 39 31 30 37 30 0D
~SUM (2 byte) BIN 2byte	00 52 44 38 39 07 01 0D

Note SUM1 is the 1's complement (bit reversal) of SUM.
SUM2 is the 2's complement of SUM.

3. CRC (Cyclic Redundancy Check Code)

This mode regards the whole data as a bit string (message polynomial), divides this string by the fixed constant (generative polynomial), and defines the remainder as the check code.

CRC detects errors better than the vertical parity or horizontal parity, and is used widely in LANs, etc. (For example, the SYSMAC LINK uses CRC-CCITT.)

Various kinds of CRC can be used. The calculation mode defined according to the CCITT recommendation is called CRC-CCITT, where $X^{16}+X^{12}+X^{5}+1$ is used as the generative polynomial. (Incidentally, CRC-16 ($X^{16}+X^{15}+X^{2}+1$) is also often used as a generating polynomial.)

: Check Code

CRT-CCITT 4byte ASCII	02 52 44 38 39 33 36 46 42 0D
CRT-CCITT 2byte BIN	02 52 44 38 39 36 FB 0D

CRT-16 4byte ASCII	02 52 44 38 39 42 46 46 41 0D
CRT-16 2byte BIN	02 52 44 38 39 BF FA 0D

Note Reverse direction is available. Default value can be set for the CRC-16

The generating function in the calculation mode of the CRC is uniquely determined as CRC-CCITT or CRC-16. Data for each character of CRC-CCITT is treated differently from that for CRC-16 as shown below.

If a message with “n” characters, which is subject to check code calculation, is expressed as shown in the following table, the MSB (most significant bit) and LSB (least significant bit) in every character for CRC-16 will be reversed as shown in the following tables.

C_0	C_1	---	C_{n-1}
D0(7) to D0(0)	D1(7) to D1(0)	---	Dn-1(7) to Dn-1(0)

Note D: 0 or 1

CRC-CCITT

C_0	C_1	---	C_{n-1}
D0(7) D0(6) to D0(0)	D1(7) D1(6) to D1(0)	---	Dn-1(7) Dn-1(6) to Dn-1(0)

CRC-16

C_0	C_1	---	C_{n-1}
D0(0) D0(1) to D0(7)	D1(0) D1(1) to D1(7)	---	Dn-1(0) Dn-1(1) to Dn-1(7)

Therefore, algorithm for each one becomes as shown below.

- CRC-CCITT algorithm

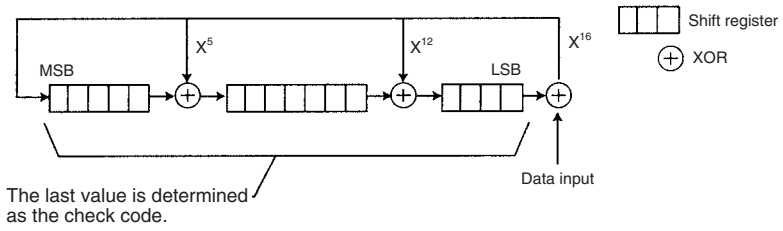

- CRC-16 algorithm

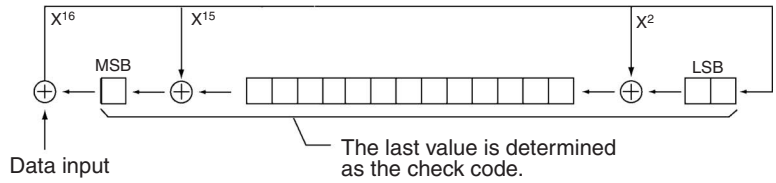

3-4-9 Supplemental Notes on Message Setup

1,2,3... **1. Designating more than one constant or variable**

To designate more than one constant or variable, use "+" as follows:

Example: Sending a command ("RX0" + word number + "00" (code number)) to determine the PV (process value) of the Temperature Controller.

"RX0" + $(N,1) + "00"

↓

A message "RX0N00" (N is the value of the repeat counter, 0-255) is sent.

N = 0: "RX0000"

N = 1: "RX0100"

N = 2: "RX0200"

2. Word writing for receive messages

For receive messages, the system needs to compare the "address part" of the message frame that was received, confirm whether this part has the self unit number or not, receive the data part if so, and store this "data part" to the appropriate area on the PLC by "word writing."

- Designate the data needed for comparison such as an address using a constant, variable with constant X, variable (word reading), wildcard, etc.
- Designate the data necessary to be stored to the area on the PLC using a "variable (word writing)."

Example: Comparing the address part (2 bytes long) and receiving the data part succeeding the address part to store in the I/O memory on the PLC.

Address Designation:

: $(R(1),2) When the received message is for the receiver (the received address is the same as the address (1 byte long) set in the third operand (CS/CJ) or second operand (C200HX/HG/HE) of the PMCR instruction + 1, and converted to ASCII, the data part succeeding this address part will be received.

Note The message to be compared (expected message) is word read (R option).

: (∗,2) Whichever unit address the destination of the receive message has, the data part succeeding the address part is received.

Note For the address part, the wildcard (∗) can be used only on X.

Data Addressing:

: &(W(1), ∗) The data that was received is written to the fourth operand (CS/CJ) or the third operand (C200HX/HG/HE) of the PMCR + 1 in hexadecimal regardless of the length.

Note To store the data that was received into the area on the PLC, use word writing (W option) to designate.

Example: Comparing some part of the receive data and storing the other part of the data to the PLC area.
The system checks the command string "TX∗∗" in the data that were received, and then stores the succeeding data to the area in the PLC.

Data Designation:

"TX"+(∗,2)+&(W(1), ∗) When receiving the command TX, the system does not compare the next 2 bytes of data, and stores the subsequent data in hexadecimal regardless of the length.

- If the wildcard (∗) is set at the data size part of "variable (word write)," the actual data size will be determined at one of the following times:

  For the CS/CJ, when the message length reaches the maximum number of bytes under PLC Setup (allocated DM area m+9, m+19).
  For the C200HX/HG/HE, when the message length reaches 256 bytes with no flow control, or when the message length reaches 200 bytes with flow control.

  When delimiting factors in the following data (terminator, constants) allow data-size recognition.

  Note Constants will be recognized as delimiters only up to 4 bytes. When using wildcards (∗), always set a terminator.

- If the wildcards are set at the data sizes of consecutively designated "variables (words write)" (separated by "+"), only the first "variable (word write)" is effective.
  For example, (W(1), ∗)+(W(10), ∗) is equal to (W(1), ∗).
- If the wildcards are set at the data sizes of consecutively designated "variables (words write)" or "variables (words read)" (separated by "+"), only the first "variable (word write)" is effective.
  For example, (W(1), ∗)+(R(2), 8) is equal to (W(1), ∗).
- If "+"s separated by a constant or a check code of less than 5 bytes are designated between "variables (words write)" the data sizes of which are set as wildcards, the constant or the check code is deemed a delimiter.

  For example, if "12345ABC5678" is received while (W(1), ∗)+"ABC"+(W(10), ∗) is set, "12345" corresponds to (W(1), ∗) and "5678" corresponds to (W(10), ∗).
- If "+"s separated by a constant or an error check code of more than 4 bytes are designated between "variables (words write)" or "variables (words read)," the data sizes of which are set as wildcards, only the first "variables (words write)" is effective.
  For example, if "12345ABCDE56789" is received while (W(5), ∗)+"ABCDE"+(R(2), 8) is set, "12345ABCDE56789" will correspond to (W(5), ∗). The (R(2), 8) setting will be ignored.
- When there is an error check code <c> after a "variables (words write)" set with a wildcard, the error check code will be calculated if the position of the error check code itself can be located within the receive message. Such a condition is satisfied at the following times.

  When the position of the error check code itself relative to the start can be calculated.
  For example: <h>+(W(2), 10)+<c>

  When the position relative to the delimiter (terminator, constant) following the error check code can be calculated.
  For example: <h>+(W(5), ∗)+<c>+<t>
  <h>+(W(5), ∗)+<c>+"ABC"+<t>
  <h>+(W(5), ∗)+<c>+"ABC"+(W(5), ∗)+<t>

Note Only constants of less than 4 bytes will be recognized as delimiters.

As in the following examples, if the position of the error check code itself within the receive message cannot be located, it will not be calculated.

For example: <h>+(W(5), ∗)+<c>
<h>+(W(5), ∗)+<c>+(W(5), ∗)
<h>+(W(5), ∗)+<c>+"ABCDE"+(W(5), ∗)

3. Setting the header, error check code, and terminator

- For the header or terminator, various special codes such as @, CR, LF, STX, or ETX are used according to the communications destination device. Always set on the message the same header or terminator as the destination device.
- There are several different kinds of error check code such as SUM, LRC, CRC-CCITT, that may be used by the communications partner. Make sure that the error check code set in the message corresponds to that used by the communications partner.
- Most external devices can send or receive only ASCII codes. In this case, convert the hexadecimal code into ASCII before sending and convert received data from ASCII to hexadecimal conversion before storage. Consider the data format and reading/writing direction which allows sending/receiving of the destination device, and convert it into a data format which can be handled with the data conversion-available variable before sending and receiving.

3-5 Creating Matrices

Matrices are set when more than one receive messages are expected to be received or when users want to change next process for each receive message.

Up to 15 types of message can be set in a matrix (case No.00 to14). In a matrix, next processes such as End, Next, Goto∗∗, or Abort are set for each one of the up to 15 types of receive (expected) message.

"Other" must also be set to enable processing when some message other than the receive messages designated in the matrix is received.

Note The attribute by which the system compares the expected value with the actually received value in the matrix is not of data, but of messages.
If only "other" is set, a protocol data syntax error (error code: 4) will occur.

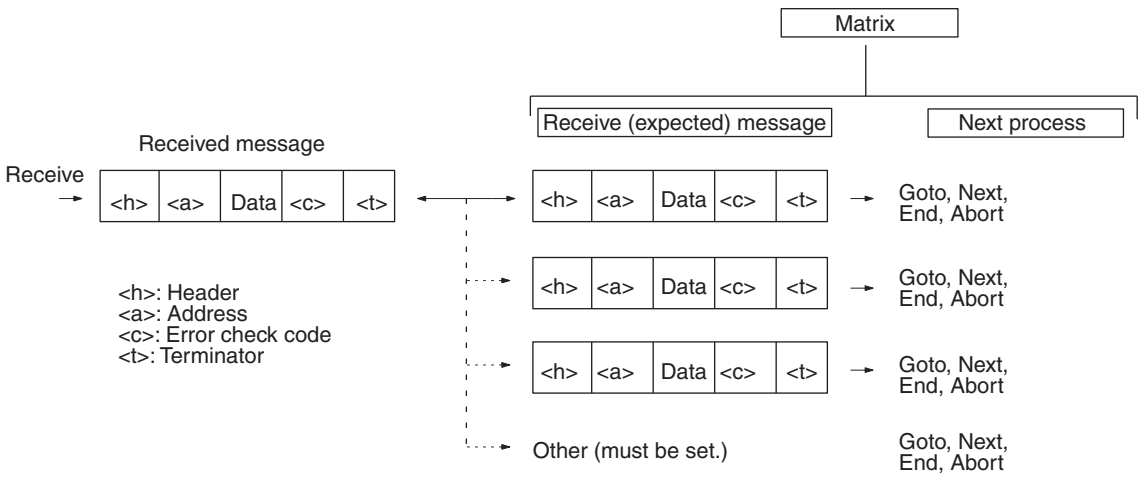

Note: Maximum of 16 cases are possible including "Other."

Note Set the format for the messages in the matrix to be the same for all cases. The matrix opens up messages under the frame configuration designated in case number 00, and performs a comparison with all the cases in order from case number 00 to case number 15.

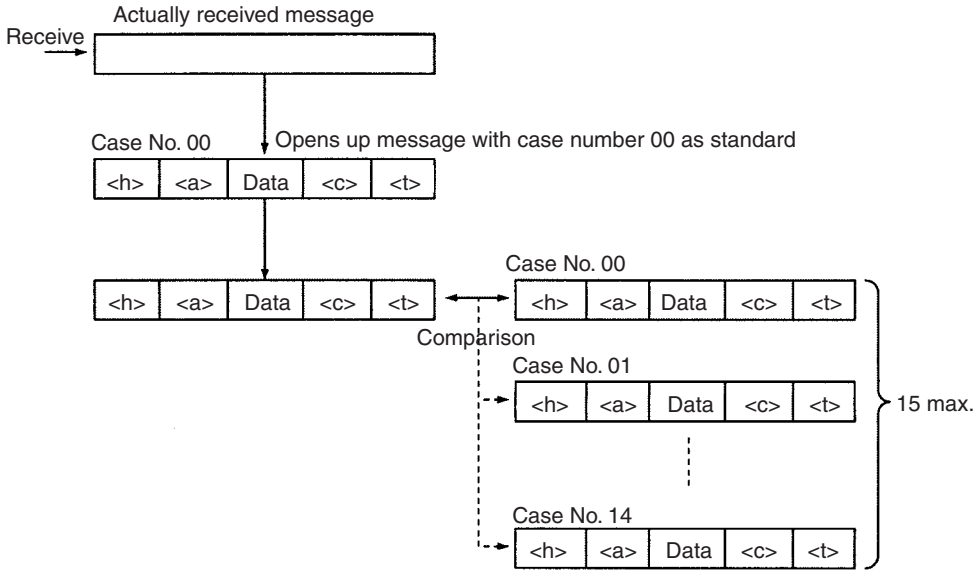

Therefore, if there are differences in message formats between cases because messages are opened up using the frame configuration of case number 00, comparison results for frames with a different message format from case number 00 will register a non-match, irrespective of the actually received message.
However, with the CS/CJ, the following operation that combines length designation and matrix, will be possible. (Not possible with C200HX/HG/HE.) With case number 00, the message is opened up using the length designation, and is compared with case numbers 00 to n. Even if the message lengths for the cases 00 to n are different, the comparison will be performed correctly.

Example of Matrix

As an example, the following matrix is used:
Case No. 0: <h>+<l>+“W”+(W(1), ∗)
Case No. 1: <h>+<l>+“R”+(W(1), ∗)
Case No. 2: <h>+<l>+“C”+(W(1), ∗)
(<h>=@)
If “@5W01234” is received, it will match with case number 0. (W(1), ∗)=“01234.”
If “@8R01234567” is received, it will match with case number 1. (W(1), ∗)=“01234567.”
If “@3C012” is received, it will match with case number 2. (W(1), ∗)=“012.”

Note Error check code or terminator can be appended.

Example: Via the host link (SYSMAC WAY), change over the process according to the response (PROGRAM/MONITOR/RUN mode) for the status read command.

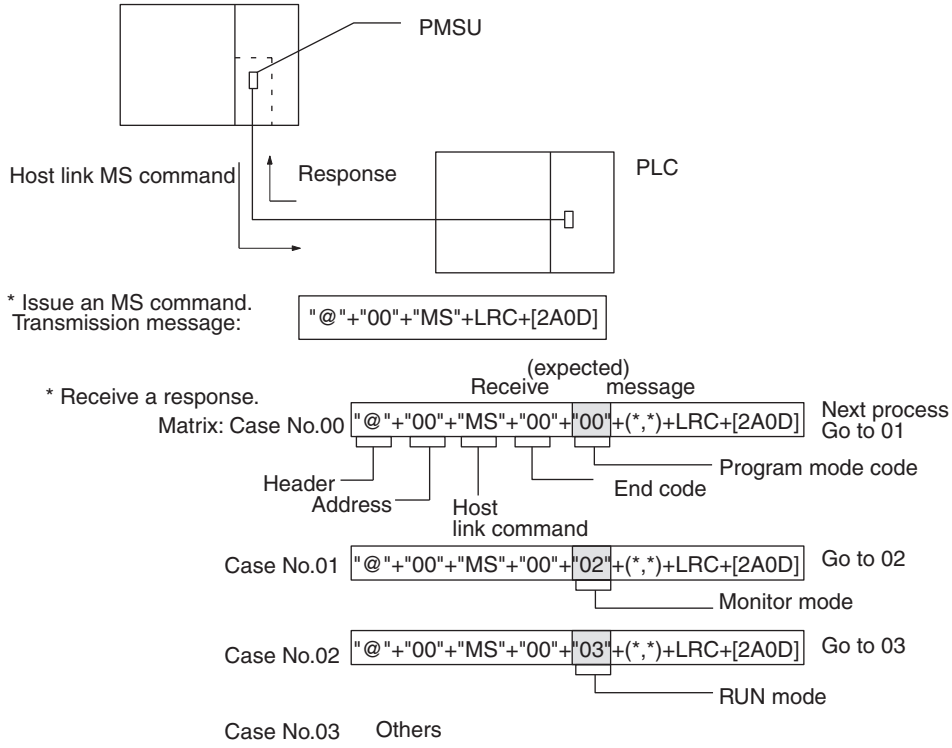

By using the matrix, identify the difference in the status in the response data (section in the above), and change over the process according to the mode of the PLC.

Matrix Example

Change over the process according to the ACK, NAK reception.

In the following example, the entire message structure is omitted and only data is indicated with “”.

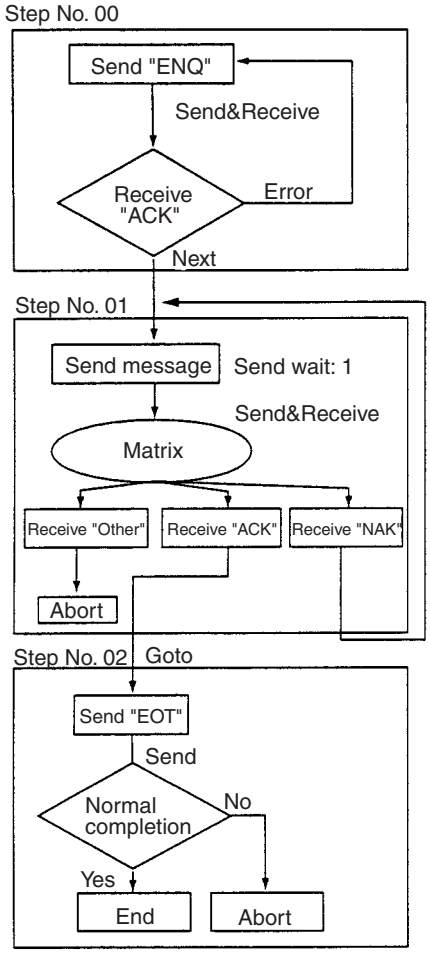

Step structure

Step No.	Repeat counter	Command	Retry	Send wait	Send message	Receive message	Response type	Next process	Error process
00	R/001	Send&Receive	---	---	"ENQ"	"ACK"	---	Next	Goto 00
01	R/001	Send&Receive	---	1 s	Message	Matrix	---	---	Goto 00
02	R/001	Send&Receive	---	---	"EOT"	---	---	End	Abort

Matrix

Case No.	Receive message	Next process
00	"ACK"	Goto02
01	"NAK"	Goto01
~	---	---
15	Other	Abort

Set next processes (End, Next, Goto**, or Abort) for each one of the up to 15 types of receive message.

For "Other" case, set the next process to be executed when the message that was received is not equal to any of the expected messages.

Note Set same header and same terminator for all the receive messages set by the matrix. If headers or terminators are different by case number, the system shall make a comparison for the received message based on the header and the terminator (or the data length, if the terminator is unavailable) of a received message set as case number 00. For example, therefore, if the header of case number 00 is “@” and the header of case number 01 is [02](STX), the system identifies that the comparison results in the unmatched even if the header of actually received message is [02], because it is different from the header “@” of case number 00

3-6 Examples of Standard System Protocols

3-6-1 “Process Value Read” Sequence of the “Controller (E5_K Read)” Protocol

Level	Item	Contents of setting
Sequence	Link word	---
	Transmission control parameter	Modem control
	Response Type	Scan
	Receive wait monitoring time Tr	3s
	Receive finish monitoring time Tfr	3s
	Send finish monitoring time Tfs	3s
Step	Step No.	00
	Repeat counter	RSET/001
	Command	Send&Receive
	Retry counter	3
	Send wait time	---
	Send message	SD(00)_1
	Receive message	RV(00)_1
	With/Without response writing	Yes
	Next process	End
	Error process	Abort
Send message SD(00)_1	Header <h>	”@”
	Terminator <t>	[2A0D]
	Error check code <c>	LRC (H parity) (0) (2-byte ASCII)
	Length <l>	---
	Address <a>	$(R(1),2)
	Message editing	<h>+<a>+"1"+"00"+"0000"+<c>+<t> Data
Reception message RV(00)_1	Header <h>	”@”
	Terminator <t>	[2A0D]
	Error check code <c>	LRC(H parity)(0) (2-byte ASCII)
	Length<l>	---
	Address<a>	$(R(1),2)
	Message editing	<h>+<a>+"1"+"00"+"00"+&(W(1),4)+<c>+<t> Data

3-6-2 “Modem Initialize (MD24FB10V)” Sequence of “Hayes Modem AT Commands” Protocol

Level	Item	Contents of setting		
Sequence	Link word	---		
	Transmission control parameter	RTS/CTS flow (receive), modem control		
	Response type	Scan		
	Receive wait monitoring time Tr	10s		
	Receive finish monitoring time Tfr	---		
	Send finish monitoring time Tfs	---		
Step	Step No.	00	01	02
	Repeat counter	RSET/001	RSET/001	RSET/001
	Command	Send&Receive	Send&Receive	Send&Receive
	Retry counter	0	0	0
	Send wait time	---	1s	1s
	Send message	MD24FB10V	MD24FB10V	MD24FB10V
	Receive message	<Initial-R1>	<Initial-R2>	<Initial-R3>
	With/Without response writing	None	None	None
	Next process	Matrix	Matrix	Matrix
	Error process	Goto 1	Goto 2	Abort
Send message MD24FB10V	Header <h>	---		
	Terminator <t>	CR		
	Error check code <c>	---		
	Length <l>	---		
	Address <a>	---		
	Message editing	"ATE0V0X4\V2\N3%C0*C0\X1&M0"+"S26=10"+<t> Data		
Matrix <Initial-R1> <Initial-R2> <Initial-R3>	Case No.	00		
	Receive message	RxD.0		
	Next process	End		
Receive message RXD.0	Header <h>	---		
	Terminator <t>	CR		
	Error check code <c>	---		
	Length <l>	---		
	Address <a>	---		
	Message editing	"0" + <t> Data		

3-7 Example of Communications Sequence

Shown below is an example of sequence to read process values from a 8CH type temperature controller (E5ZE):

3-7-1 Sequence Setup Content

Sequence No. 101

Link word	Transmission control mode	Response type	Monitor time Tr	Monitor time Tfr	Monitor time Tfs
---	Modem control	Scan mode	3 s	3 s	3 s

3-7-2 Step Setup Content

Create a process flow as follows:

Step No. 00

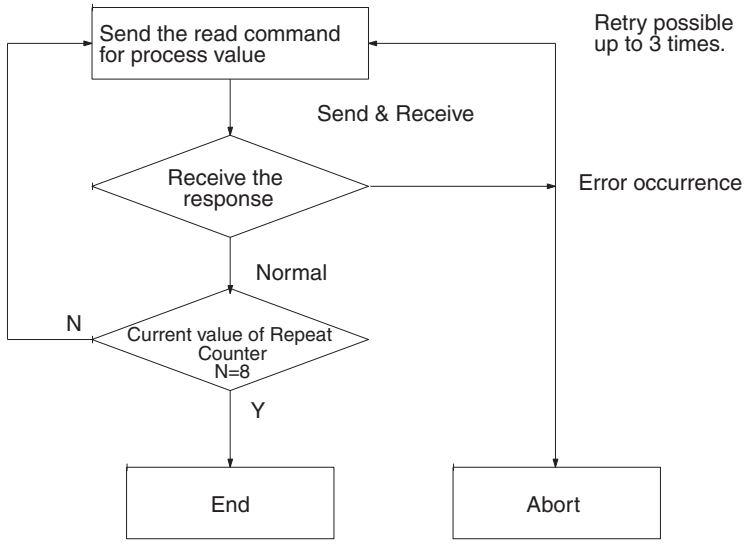

Normal

The system sends the read command for a process value and waits the response from the Temperature Controller. It converts the process value data to hexadecimal codes and store them in I/O memory. It uses the repeat counter to switch the PLC area, sends the read command for the next process value until eight words of process values are read and stored in the PLC areas.

Abnormal

According to a set retry count (three times), the same step is repeatedly executed up to three times automatically when any of the following errors occurs:

- The send finish monitoring time Tfs, the receive wait monitoring time Tr, or the receive finish monitoring time Tfr has expired.
- A receiving communication error occurred (For CS/CJ, port 1: n+8 bit 15, port 2: n+18 bit 15 is “ON”, n=1,900 (board), 1,500+25×Unit No. (unit). For C200HX/HG/HE, port A: CIO28304 or port B: 28312 is “ON”).
- Wrong receive message.
- An error in the error check code.

Step No. 00

Repeat counter	Command	Retry count	Send wait time	Send message	Receive message	With/Without response writing	Next process	Error process
RSET/008	Send& Receive	3	---	Refer to page 119, *Send Message Creation*	Refer to page 120, *Receive Message Creation*	Yes	End	Abort

*	Step	Repeat	Command	Retry	Send Wait	Send Message	Recv Message	Response	Next	Error
	00	RSET/008	Send & Receive	3	---	SD(RX)_1	RV(RX)_1	Yes	End	Abort

3-7-3 Send and Receive Messages Creation

The system can read the PV (process variable) of the designated word on the temperature controller (E5ZE) by sending the “RX0N00” (N is the word number of the controller) command. Only one word of data can be read in one time of data sending or receiving. When reading 8 words of data, it is necessary to execute the Send&Receive command 8 times repeatedly.

Send message

Example: A frame of read command for the process variable

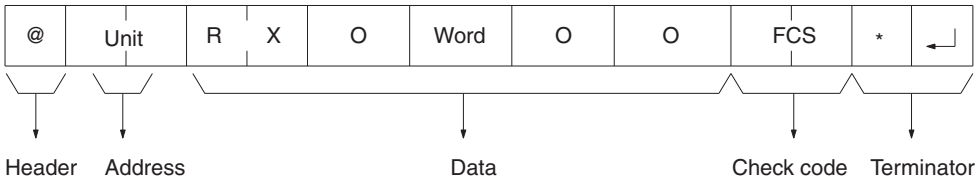

*	Send Message	Header <h>	Terminator <t>	Check code <c>	Length <l>	Address <a>	
	SD(00)_1	“@”	[2A0D]	LRC (H parity)(0) (2Byte ASCII)		$(R(1),2)	<h>+<a>+

Receive message

Example: A frame of the response to the read command for the process variable

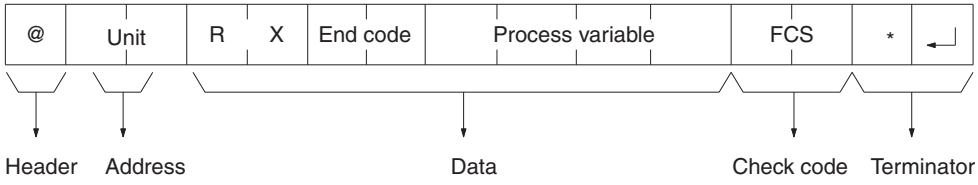

*	Receive Message	Header <h>	Terminator <t>	Check code <c>	Length <l>	Address <a>	
	RV(00)_1	“@”	[2A0D]	LRC (H parity)(0) (2Byte ASCII)		$(R(1),2)	<h>+<

Send Message Creation

- Designating the unit number as 2 characters (1 byte) beginning from the third operand (second operand for C200HX/HG/HE) of the PMCR instruction + 1

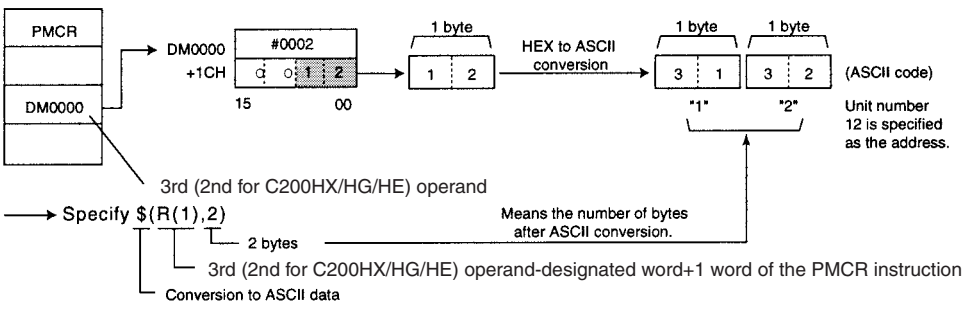

- Designating the word number of the measured temperature as 1 digit of the repeat counter N

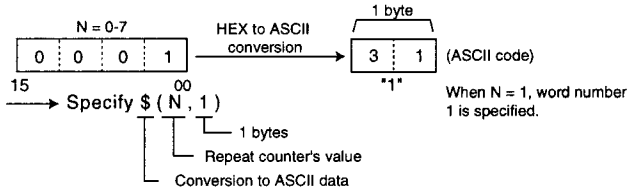

As a result, create the send message as follows.

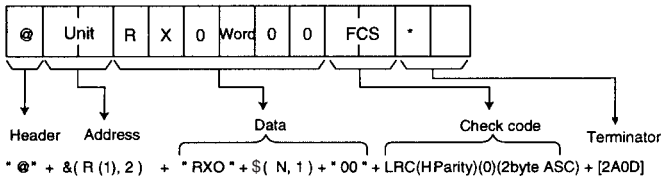

Receive Message Creation

- When reading the data of the measured temperature from the word designated by the fourth operand (third operand for C200HX/HG/HE) of the PMCR instruction + (2N + 1) without fixing the length.

Note N means the value of the repeat counter.

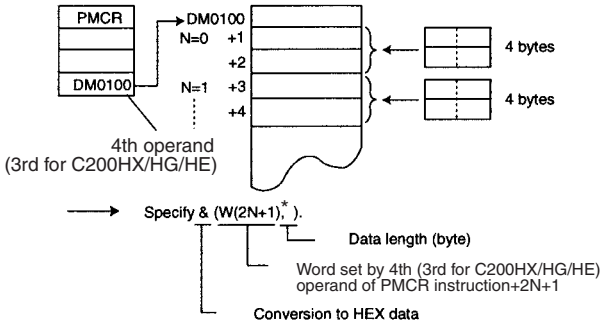

Create the receive message as follows.

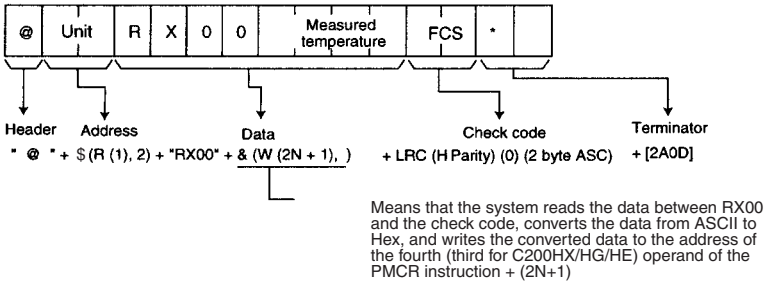

3-7-4 Contents of Sequence

"Measuring temperature read" in sequence No. 101 of "Temp Controller (E5ZE read) protocol."

- Sequence attribute setting

Item	Contents
Link word	No setting
Transmission control parameter	Modem control available
Response type	Scan
Receive wait monitoring time (Tr)	3 s
Receive finish monitoring time (Tfr)	3 s
Send finish monitoring time (Tfs)	3 s

- Step attribute setting

Step 00 (only)

Item	Contents
Repeat counter	Repeat type: Reset
	Counter: 8 (constant)
Command	Send & Receive
No. of retries	3
Send wait time	None
Send message	Message name: SD (RX)_1
Receive message	Message name: RV (RX)_1
With/Without Response Writing	Yes
Next process	End
Error process	Abort

- Presence of send/receive message

Send message name <SD(RX)_1>

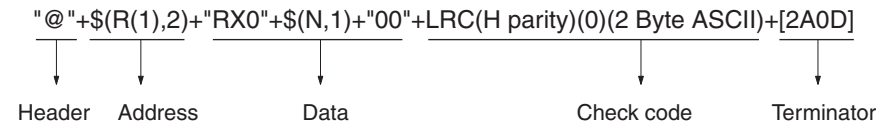

Receive message name <RV(RX)_1>

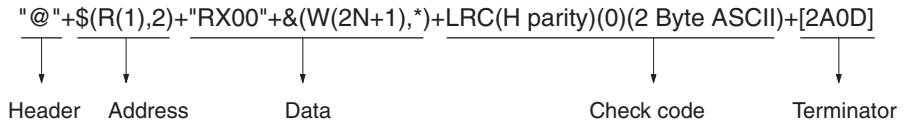

3-8 Executing a Created Communications Sequence (CS/CJ)

This section describes how to execute the communications sequence described so far using a CS/CJ PLC. It is necessary to transfer the protocol that was created to the Serial Communications Board/Unit in advance. However, the previously mentioned communications sequence is registered in sequence number 101 of the incorporated standard system protocol, so the following describes the procedure for executing sequence number 101.

Note It is assumed that the standard protocol is under the initial status. When the sequence is changed, for example, by the CX-Protocol, return to the original sequence before execution.

3-8-1 Device Connection

For example, a CS PLC, CS1W-SC41-V1 Serial Communications Board, and E5ZE Temperature Controller are connected as follows.

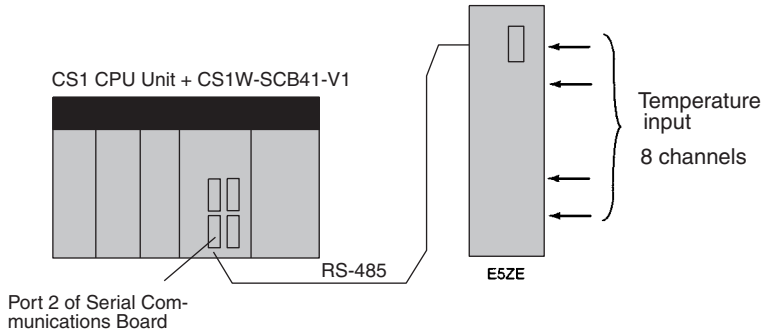

Eight points of measured temperature are stored in DM 00101 to DM 00116.

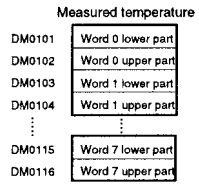

3-8-2 Initial Setup

1,2,3... 1. Set the DIP switch on the Serial Communications Board.

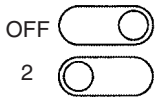

Terminator switch	OFF: Without terminator	ON: With terminator
Wire switch	2: 2-wire type	4: 4-wire type

2. Set the allocated DM area for the CS/CJ as follows:

Address (see note)	Set value	Contents
D32010	0600	Treats the protocol macro as the communications mode and takes the standard communications conditions.
D32011	0000	Standard baud rate.
D32018	0000	Half-duplex
D32019	00C8	Maximum number of bytes for protocol macro send/ receive message: 200 bytes.

Note Setting address for port 2 of the Board.

Standard settings:

Start bit	1 bit
Data length	7 bits
Parity	Even parity
Stop bit	2 bits
Baud rate	9,600 bps

Note For more information of the PLC setup area related to the protocol macro function, refer to *Appendix B PLC Setup and PMSU Settings*.

3. Set the E5ZE Temperature Controller.

   Set the unit number to “0” and baud rate to “9,600 bps.”

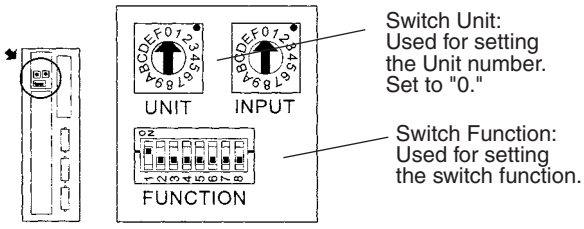

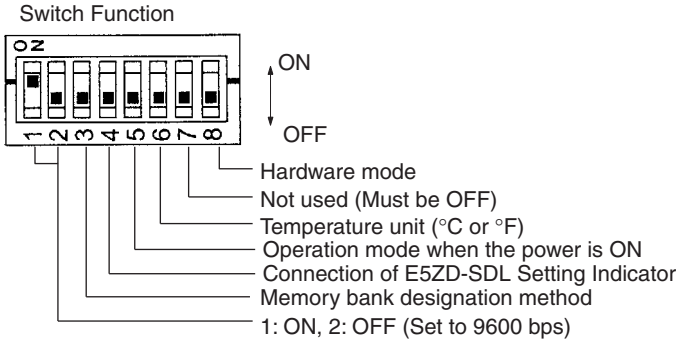

Note After changing the DIP switch’s setting, turn OFF and ON the power supply once.

3-8-3 Creating Ladder Programs

The protocol is executed by the PMCR instruction of the PLC. For details about the related auxiliary area and allocated data areas, refer to page 134.

PMCR Instruction Specifications:

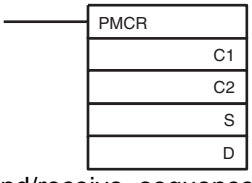

- Function: Calls the send/receive sequence number registered in the Serial Communications Board, and by executing the send/receive sequence of that number, sends data to or receives data from a general-purpose external device via port 1 or 2 of the Serial Communications Board.
- Meaning of operands:

  C: Control data

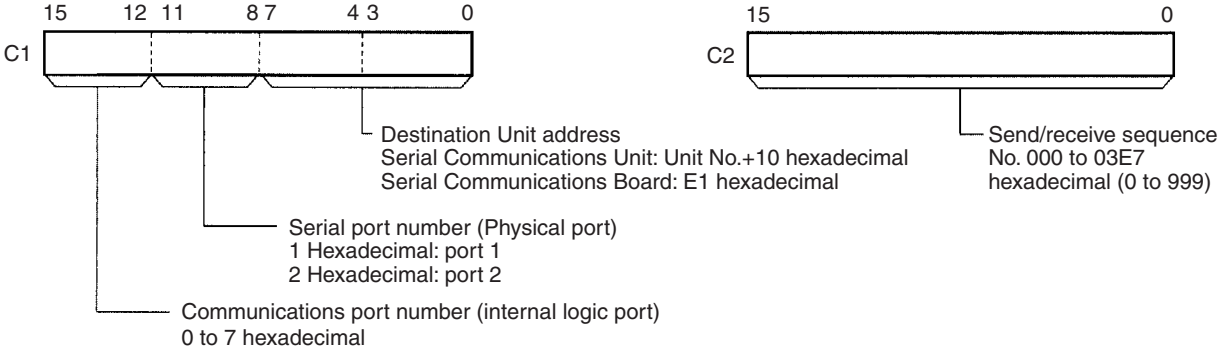

S: First word number of send data

Set the first word of the word area where data required for sending is stored.

Note When there is no send data, be sure to set to #0000.

In S, the number of words, starting from S, that contain valid send data is stored.

In S+1 onwards, the actual send data is stored.

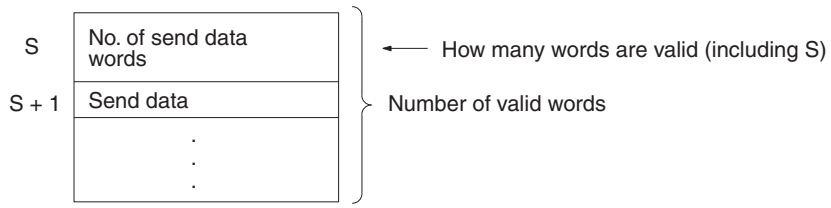

D: First word number of storage area for receive data.

Set the first word of the word area in which the receive data is to be stored.

Note When there is no receive data, be sure to set to #0000.

In D, the number of valid word numbers from D+1 is stored.

In D+1 onwards, the initial data that was in the receive buffer before execution of the send/receive sequence, and the received data is stored.

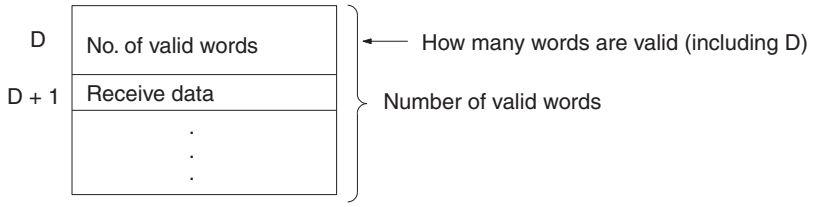

Note The function of the receive data storage area (the data stored in the area starting with D and continuing for the number of words indicated in D) before the PMCR instruction is executed, differs to the function of the area afterwards.

Before execution of PMCR instruction

The receive data storage area functions as initial value data in the receive buffer before execution of a send/receive sequence.

After execution of PMCR instruction

The received data storage area will be used to store data received with a Receive operation (when With/Without Response Write is set to **Yes**).

- Flags

Flag	Label	ON	OFF
Error Flag	ER	Turns ON upon instruction execution, if the Communications Port Enabled Flag for the designated communications port (internal logic port) is OFF. Turns ON if the designated serial port (physical port) is not in protocol macro mode. Turns ON if the data in C1 or C2 is outside the range.	Remains OFF in any situation not indicated under “ON.”
Access Error Flag	AER	Turns ON if an area in the send data and read data has been set to not allow read or write. Turns ON if an area in the receive data has been set to prohibit writing.	Remains OFF in any situation not indicated under “ON.”

• Data Contents

Area	C1	C2	S	D
CIO Area (I/O, etc.)	0000 to 6143			
Work Area	W000 to 511			
Holding Area	H000 to 511			
Auxiliary Area	A000 to 959			A448 to 959
Timer	T0000 to 4095			---
Counter	C0000 to 4095			---
DM Area	D00000 to 32767			
EM Area	E00000 to 32767			See note.
EM Area (including bank designation)	En_00000 to 32767 (n=0 to C)			See note.
Indirect DM/EM (binary)	@D00000 to 32767 @E00000 to 32767 @En_00000 to 32767 (n=0 to C)			See note.
Indirect DM/EM (BCD)	*D00000 to 32767 *E00000 to 32767 *En_00000 to 32767 (n=0 to C)			See note.
Constants	Refer to previous description.	0000 to 03E7 hexa-decimal (0 to 999)	#0000 to FFFF (binary data)	
Data registers	DR0 to 15		---	
Index Registers (Direct)	---			
Index Registers (Indirect)	,IR0 to 15 –2048 to +2047,IR0 to 15 DR0 to 15 ,IR0 ,IR0 to 15 ,IR0 to 15+(++) ,–(– –)IR0 to 15			See note.

Note The EM area cannot be designated for the receive data with the interrupt notification function for the Serial Communications Board. If such a designation is attempted, the Protocol Macro Syntax Error (A42410) will turn ON.

Contents of send/receive data word allocation to read the process value in sequence No.101 of the standard system protocol “Temp Controller (E5ZE read)” are as follows.

Read the process value and store the result in the designated address.

• Send data word assignment (third operand of PMCR instruction)

Send data starting address	+0	No. of send data words	
	+1	(Indeterminate)	Unit No.

Offset	Contents (Data format)	Data
+0	No. of send data words (hexadecimal 2-digit)	0002 (fixed)
+1	Unit No. (hexadecimal 2-digit)	00 to 0F

• Receive data word assignment (fourth operand of PMCR instruction)

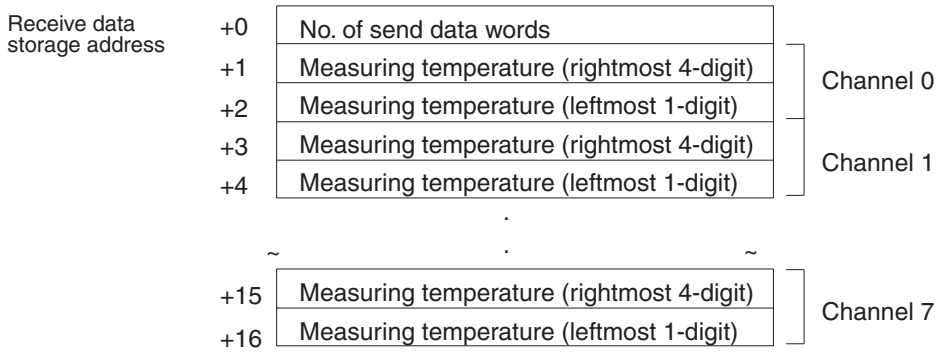

Offset	Contents (Data format)	Data
+0	No. of receive data words (hexadecimal 2-digit)	0017
+1	CH0 Measuring temperature (rightmost 4-digit) (BCD 4-digit)	Differs depending on the temperature measuring model. Refer to the *E5ZE Operation Manual* F denotes "–" (minus).
+2	CH0 Measuring temperature (leftmost 1-digit) (BCD 1-digit)	
to	to	to
+15	CH7 Measuring temperature (rightmost 4-digit) (BCD 4-digit)	Differs depending on the temperature measuring model. Refer to the *E5ZE Operation Manual*. F denotes "–" (minus).
+16	CH7 Measuring temperature (leftmost 1-digit) (BCD 1-digit)	

Settings of the PMCR Instruction

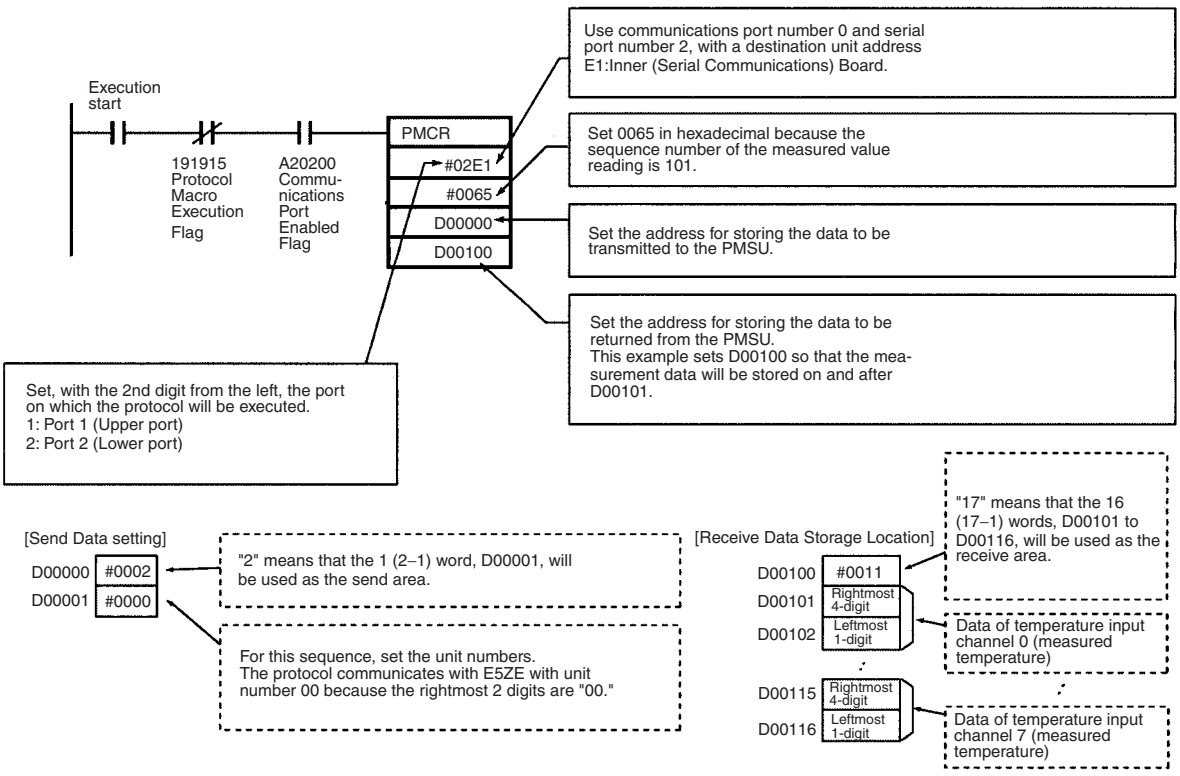

Note Observe the following precautions when using the PMCR instruction.

• In the following cases, set the third operand of the PMCR instruction to the constant (#0000):

- If an operand-designated reading variable is not used in the sequence to be performed.
- If there is no send data word allocation when using the standard system protocol.

Transmitting no data to the PSB

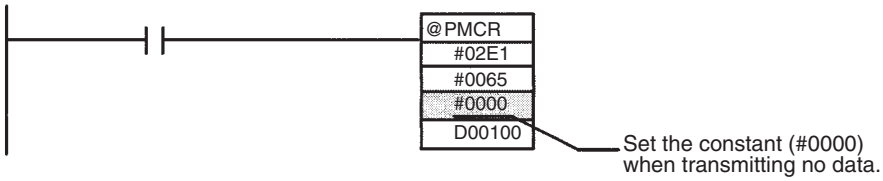

- In the following cases, set the fourth operand of the PMCR instruction to the constant (#0000) or to a dummy word.
  - If an operand-designated writing variable is not used in the sequence to be performed.
  - If there is no receive data word allocation when using the standard system protocol.

Storing no data to the data area on the PLC

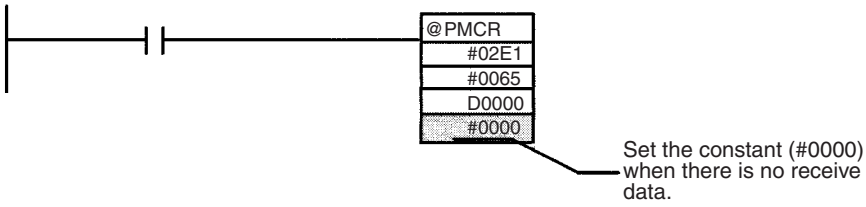

3-8-4 Operation

The following describes the system's operation when executing the ladder program shown in *3-8-3 Creating Ladder Programs*.

1,2,3...

1. When executing a PMCR instruction, the system transmits the information set in the operand of the PMCR instruction such as the starting sequence number and communications data storage area, and turns ON the Protocol Macro Execution Flag (191915).
2. The PMSU reads the communication sequence with the appropriate sequence number set in the PMCR instruction.
3. The system sends "RX0 Channel No. 00" as the command measuring the temperature of the Temperature Controller's designated channel to the unit number (00) of the E5ZE Temperature Controller stored in DM0001.
4. The system receives "RX00" as the response from the Temperature Controller (00 means the end code) from the E5ZE with unit number 00 to store the next measured temperature into D00101 and D00102 through the PLC scan.
5. The system increments the value of the repeat counter by 8 times repeatedly. Each time the repeat counter is incremented, the following contents will be changed.
   - The word number of the Temperature Controller designated by $(N,1) in the send message changes in a range from 0 to 7.

- The DM area storing the measured temperature designated by &(W(2N+1),*) in the receive message changes as follows:

D00101 → D00103 → D00105 → D00107 → D00109 → D00111 → D00113 → D00115

6. When the system ends the execution of the sequence, the Protocol Macro Execution Flag (191915) will turn OFF.

3-8-5 Confirming the Operation

When the process variable is not stored successfully, confirm the following points.

- INNER continuation error.
  - Confirm that the System Setup is set correctly.
- Bit 191914 (Step Error Processing Flag) is ON.
  - Confirm that the System Setup is correct. (In particular, check that port 1 and port 2 are not designated conversely.)
  - Confirm that the wiring is correct (refer to the *CS/CJ-series Serial Communications Boards and Serial Communications Unit Operation Manual (W336)* for the wiring method).
  - Confirm the communication rate, frame, and unit number of the E5ZE.
- No error, but data is not stored.
  - Confirm that the RUN indicator of the E5ZE is lit. (For details, refer to the *E5ZE Operation Manual (H076).)*

Note When trace operation is executed from the CX-Protocol, from that point, the Serial Communications Board performs a trace on chronological data in the send/receive message (up to 1,700 bytes). Using this, it is possible to confirm what kind of messages are sent and received at each step. (For details about traces, refer to *SECTION 12 Tracing and Monitoring*.)

3-9 Executing a Created Communications Sequence (C200HX/HG/HE)

This section describes how to execute the communication sequence described so far, using a C200HX/HG/HE PLC. It is necessary to transfer the protocol that was created to the PMSU in advance. However, the previously mentioned communication sequence is registered in sequence number 101 of the incorporated standard system protocol, so the following describes the procedure for executing sequence number 101.

Note It is assumed that the standard protocol is under the initial status. When the sequence is changed, for example, by the CX-Protocol, return to the original sequence before execution.

3-9-1 Device Connection

It is assumed as an example that a C200HX PLC, C200HW-COM06-EV1 Communications Board, and E5ZE Temperature Controller are connected as follows.

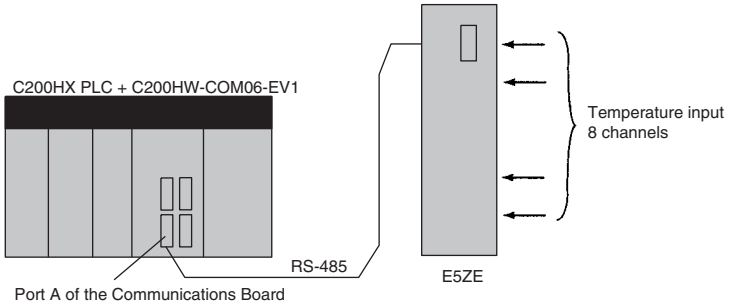

Eight points of measured temperature are assumed to be stored to DM101 to DM 116.

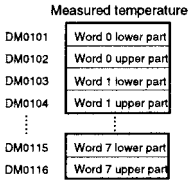

3-9-2 Initial Setup

1,2,3... 1. Set the DIP switch on the PMSU.

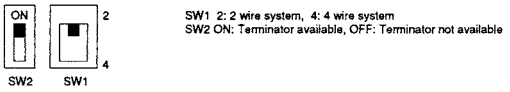

2. Set the PLC Setup of C200HX as follows:

   Note Communications mode as the protocol macro function to set the communications requirements as follows:

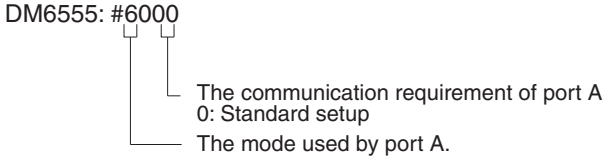

   Standard setup contents

Start bit	1 bit
Data length	7 bits
Parity	Even parity
Stop bit	2 bits
Baud rate	9,600 bps

   Note For more information of the PLC Setup area related to the protocol macro function refer to *Appendix B PLC Setup and PMSU Settings*.

3. Set the E5ZE Temperature Controller.

Set the unit number to “0” and baud rate to “9,600 bps.”

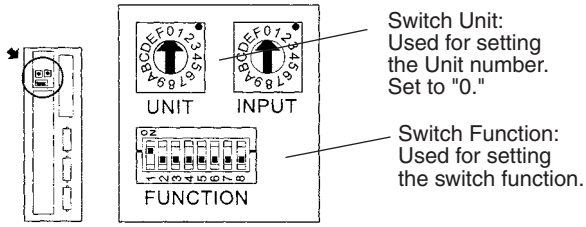

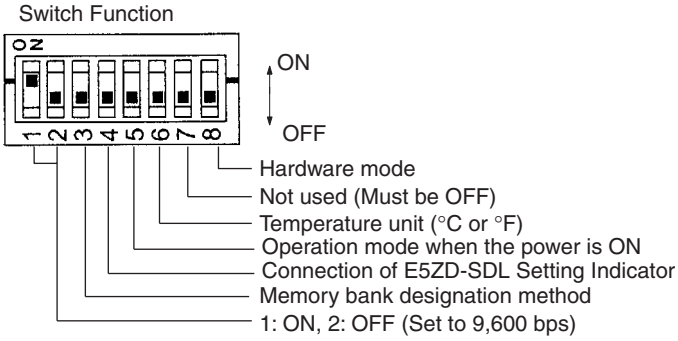

Note After changing the DIP switch settings, turn OFF and ON the power supply once.

3-9-3 Creating Ladder Programs

The protocol is executed by the PMCR instruction of the PLC. For details about related auxiliary area and data areas, refer to page 134.

- PMCR instruction specification
  - Function: Calls the send/receive sequence number registered in the PMSU, and executing the send/receive sequence of the corresponding sending/reception sequence and sends/receives data to/from the general-purpose external device through port A or B of the PMSU.
  - Meaning of Operand:

C: Control data

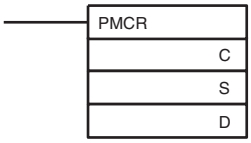

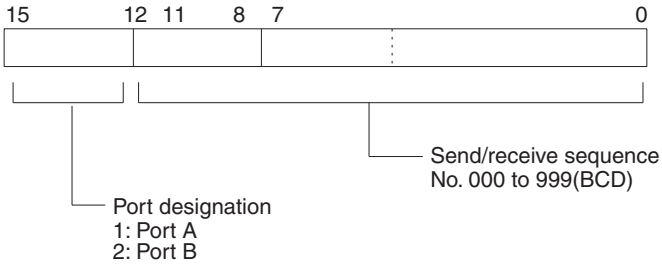

S: Send data first word number

Set the first word at the data area where data required for setting is stored.

Note When no send data is found, be sure to set to #0000. Setting to another constant or word generates an error (ER Flag 25503 is ON), and the PMCR instruction is not executed.

Send data of the number of words that are valid at S and the following are stored in S.

Actual send data is stored in S+1 and the following.

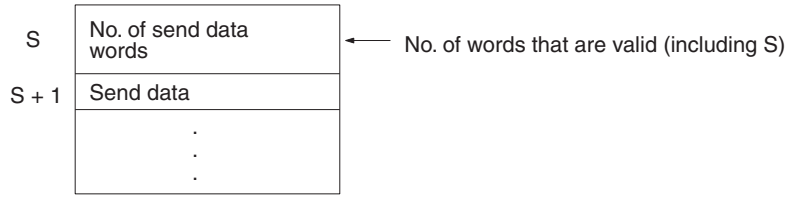

D: Receive data storage starting address number

Set the starting address at the data area where receive data is stored.

Note When no receive data is found, be sure to set a dummy word. Setting a constant (#0000 to FFFF) generates an error (ER Flag 25503 is ON), and the PMCR instruction is not executed.

Data is not written to the dummy word. It can be used for the others.

Receive data is not stored in D and the following.

The number of effective addresses is stored in D1–, D+ 1 and the following.

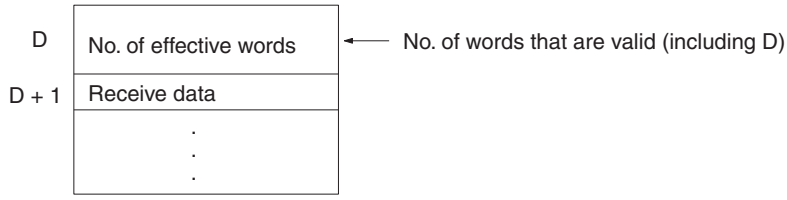

• Flag

Value	ON	OFF
ER(25503)	• When *DM (Indirect) is designated, the DM contents are not 6656 or higher or BCD. • For D, the DM contents are not 6144 or higher or BCD. • When the instruction is executed or already in execution. • When neither 1 nor 2 is designated for the port.	Other than the cases mentioned to the left.

• Data Contents

Model	C200HX/HG/HE		
Operand	C	S	D
Internal relay area 1	000-255	000-255	000-252
Internal relay area 2	256-511	256-511	256-511
Hold relay	HR00-99	HR00-99	HR00-99
Auxiliary relay	AR00-27	AR00-27	AR00-27
Link relay	LR00-63	LR00-63	LR00-63
Timer/counter	T/C000-511	T/C000-511	T/C000-511
Temporary relay	---	---	---
Data memory	D0000-6655	D0000-6655	D0000-6143

Indirect data memory	*D0000-6655	*D0000-6655	*D0000-6655
Constant	See the above.	#0000-FFFF	---

Contents of send/receive data word assignment to read the process value in sequence No.101of the standard system protocol, “Temp Controller (E5ZE read)” are as follows:

Read the process value and store the result in the designated address.

- Send data word assignment (Second operand of PMCR instruction)

Send data starting address			
+0	No. of send data words		
+1	(Indeterminate)	Unit No.	

Offset	Contents (Data format)	Data
+0	No. of send data words (BCD 4-digit)	0002 (fixed)
+1	Unit No. (hexadecimal 2-digit)	00 to 0F

- Receive data word assignment (Third operand of PMCR instruction)

Receive data storage address		
+0	No. of send data words	
+1	Measuring temperature (rightmost 4-digit)	Channel 0
+2	Measuring temperature (leftmost 1-digit)	
+3	Measuring temperature (rightmost 4-digit)	Channel 1
+4	Measuring temperature (leftmost 1-digit)	
~	.	~
+15	Measuring temperature (rightmost 4-digit)	Channel 7
+16	Measuring temperature (leftmost 1-digit)	

Offset	Contents (Data format)	Data
+0	No. of receive data words (BCD 4-digit)	0017
+1	CH0 Measuring temperature (rightmost 4-digit) (BCD 4-digit)	Differs depending on the temperature measuring model. Refer to the *E5ZE Operation Manual*. F denotes “–” (minus).
+2	CH0 Measuring temperature (leftmost 1-digit) (BCD 1-digit)	
to	to	to
+15	CH7 Measuring temperature (rightmost 4-digit) (BCD 4-digit)	Differs depending on the temperature measuring model. Refer to the *E5ZE Operation Manual*. F denotes “–” (minus).
+16	CH7 Measuring temperature (leftmost 1-digit) (BCD 1-digit)	

Settings of the PMCR Instruction

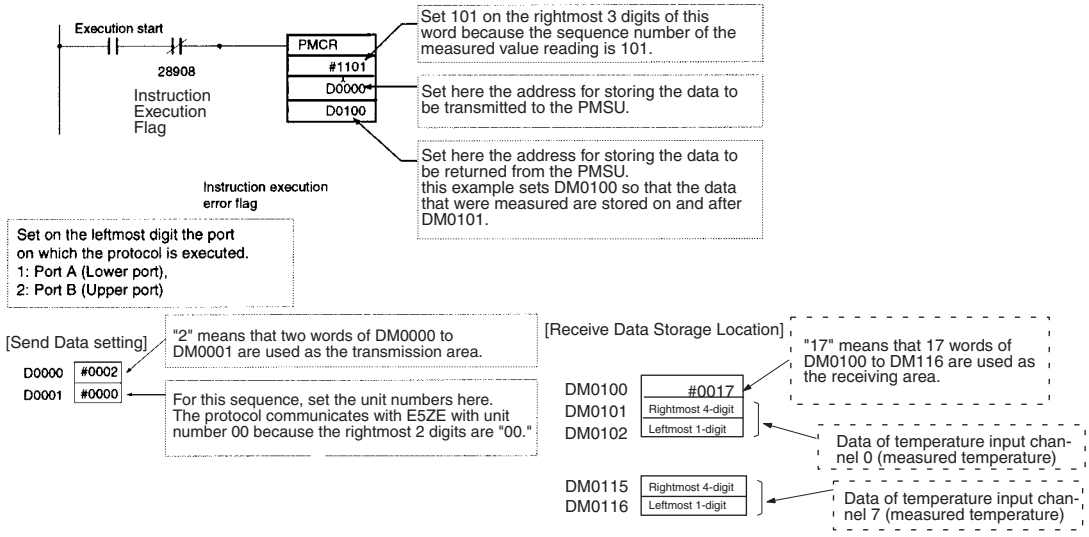

Note Observe the following precautions when using the PMCR instruction.

- If transmitting no data to the PMSU.

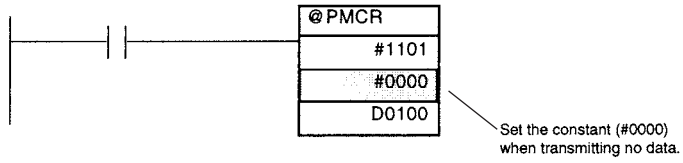

- If storing no data to the data area on the PLC.

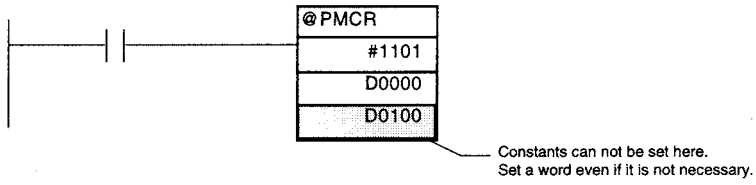

3-9-4 Operation

The following describes the system's operation when executing the ladder program shown in *3-9-3 Creating Ladder Programs*.

1,2,3...

1. When starting to execute a PMCR instruction, the system transmits the information set in the operand of the PMCR instruction such as the starting sequence number and communications data storage area, and turns ON the Port A Instruction Execution Flag (28908).
2. The PMSU reads the communication sequence with the appropriate sequence number set in the PMCR instruction.
3. The system sends "RX0 Channel No. 00" as the command measuring the temperature of the Temperature Controller's designated channel to the unit number (00) of the E5ZE Temperature Controller stored in DM0001.
4. The system receives "RX00" as the response from the Temperature Controller (00 means the end code) from the E5ZE with unit number 00 to store the next measured temperature into DM0101 and DM0102 through the PLC scan.

5. The system increments the value of the repeat counter by 8 times repeatedly. Every time the repeat counter is incremented, the following contents are changed.
   - The word number of the Temperature Controller designated by $(N,1) in the send message changes between 0 and 7.
   - The DM area storing the measured temperature designated by &(W(2N+1),*) in the receive message changes as follows:

   DM0101 → DM0103 → DM0105 → DM0107 → DM0109 → DM0111 → DM0113 → DM0115
6. When the system ends the execution of the sequence, the Port A Instruction Execution Flag (28908) will turn OFF.

3-9-5 Confirming the Operation

If the process variable is not stored successfully, confirm the following points.

- System error FAL9C.
  - Confirm that the PLC's Setup is set correctly.
- Bit 28909 (Port A Step Error Processing Flag) is ON.
  - Confirm that the PLC's Setup is correct. (Especially confirm whether port A and port B are not designated conversely.)
  - Confirm that the line distribution (Refer to the *Communications Boards Operation Manual (W304)* to connect the line is correct).
  - Confirm the communication rate, frame, and unit number of the E5ZE.
- No error, but data are not stored.
  - Confirm that the RUN indicator of E5ZE is lit. (For details, refer to the *E5ZE Operation Manual (H076).)*

Note When trace operation is executed from the CX-Protocol, from that point, the Serial Communications Board performs a trace on chronological data in the send/receive message (up to 670 bytes). Using this, it is possible to confirm what kind of messages is sent and received at each step. (For details about traces, refer to *SECTION 12 Tracing and Monitoring*.)

3-10 Auxiliary Area and Allocated Data Areas

PMSU status (sequence and step execution status) are allocated to the following auxiliary area and data areas on the CPU Unit, and can be used from the ladder program.

3-10-1 Special Auxiliary and Allocated Areas

The following table provides a list of the protocol macro related bits for the CS/CJ Serial Communications Board/Unit and the C200HX/HG/HE Communications Board.

n = 1500 + 25 × Unit No. (For the Serial Communications Unit only.)

Type	Name	CS Serial Communications Board		CS/CJ Serial Communications Unit		C200HX/HG/HE Communications Board		Contents
		Word	Bit	Word	Bit	Word	Bit	
System error	PMSU Watchdog Timer Error	A424	00	A417 (CPU Bus Unit Error No. Flag)	00 to 15 (For Unit No. 0 to 15) See note.	CIO 268 Communications Board error details area System error FAL9C error	00	1: Error 0: Normal
	Inner Bus Error (Port recognition error)		01	None			01	1: Error 0: Normal
	Protocol Data Error (Protocol data checksum error due to memory damage)	A424	09	None			02	1: Error 0: Normal
		CIO 1901	00	n+1	00			1: Error 0: Normal
	Protocol Macro Execution Error (At port 2 or B)	A424	10	None			11	1: Error 0: Normal
	Protocol Macro Execution Error (At port 1 or A)						12	1: Error 0: Normal
	System Setting Error	A424	08	None			13 to 15 15: System setting error 14: Error at port A 13: Error at port B	1: Error 0: Normal
		CIO 1906 or CIO 1916	01	n+6/n+16	01			

Note A40207 (CPU Bus Unit Error Flag) is the representative bit.

Type	Name	CS Serial Communications Board		CS/CJ Serial Communications Unit		Common	C200HX/HG/HE Communications Board				Contents
		Allocation Area					Special Auxiliary Area				
		Port 1 word	Port 2 word	Port 1 word	Port 2 word	Bit	Port A word	Bit	Port B word	Bit	
Port Operation	Port Operating	CIO 1906	CIO 1916	n+6	n+16	00	None		None		1: Port operating 2: Port stopped
	Restart Flag (each port)	A636 Bit 01	A636 Bit 02	A620 + Unit No. Bit 01	A620 + Unit No. Bit 02		CIO 289	00	CIO 289	01	0 to 1: Restart

Type	Name	CS Serial Communications Board		CS/CJ Serial Communications Unit		Common	C200HX/HG/HE Communications Board				Contents
		Allocation Area					Special Auxiliary Area				
		Port 1 word	Port 2 word	Port 1 word	Port 2 word	Bit	Port A word	Bit	Port B word	Bit	
Protocol Macro	Protocol Macro Execution Flag (each port)	CIO 1909	CIO 1919	n+9	n+19	15	CIO 289	08	CIO 289	12	1: Protocol macro (sequence) executing 0: Protocol macro (sequence) abnormal execution
	Protocol Macro Error Code (each port)	CIO 1909	CIO 1919	n+9	n+19	00 to 03	CIO 286	08 to 11	CIO 286	12 to 15	0: No error 1: No protocol function (C200HX/HG/HE only) 2: Sequence No. error 3: Data read/data write area exceeded error 4: Protocol data syntax error

Type	Name	CS Serial Communications Board		CS/CJ Serial Communications Unit		Common	C200HX/HG/HE Communications Board				Contents
		Allocation Area					Special Auxiliary Area				
		Port 1 word	Port 2 word	Port 1 word	Port 2 word	Bit	Port A word	Bit	Port B word	Bit	
Sequence Monitor	Communication Sequence No. (each port)	CIO 1910	CIO 1920	n+10	n+20	00 to 11	None		None		000 to 03E7 hexadecimal (000 to 999)
	Execution Completion Step No. (code) (each port)	CIO 1911	CIO 1921	n+11	n+21	08 to 11	CIO 287	04 to 07	CIO 288	04 to 07	0 to F hexadecimal (0 to 15)
	Execution Completion Step No. Storage Flag (each port)	CIO 1913	CIO 1923	n+13	n+23	00 to 15	None		None		0 to 15 bits: Corresponds to step No. 0 to 15
	Execution Completion Step Matrix Case No. (code) (each port)	CIO 1911	CIO 1921	n+11	n+21	00 to 03	CIO 287	00 to 03	CIO 288	00 to 03	0 to F hexadecimal (0 to 15)
	Execution Completion Matrix Case No. Storage Flag	CIO 1912	CIO 1922	n+12	n+22	00 to 15	None		None		0 to 15 bits: Corresponds to case No. 0 to 15
	Execution Completion Storage Flag (each port)	None	None	None	None	None	CIO 287	15	CIO 287	15	0: Nothing stored 1: Stored
	Repeat Counter Present Value (each port)	CIO 1914	CIO 1924	n+14	n+24	00 to 07	CIO 284	00 to 07	CIO 285	00 to 07	01 to FF hexadecimal
	Repeat Counter Set Value (each port)	CIO 1914	CIO 1924	n+14	n+24	08 to 15	None		None		01 to FF hexadecimal
	Sequence End Completion Flag (each port)	CIO 1909	CIO 1919	n+9	n+19	11	CIO 289	10	CIO 289	14	1: Sequence end completed 0: Sequence end not completed
	Sequence Abort Completion Flag (each port)	CIO 1909	CIO 1919	n+9	n+19	10	CIO 283	07	CIO 283	15	1: Sequence abort completed 0: Sequence abort not completed
Step Error	Step Error Processing Execution Flag (each port)	CIO 1909	CIO 1919	n+9	n+19	14	CIO 289	09	CIO 289	13	1: Step error processing completed 0: Step error processing not completed

Type	Name	CS Serial Communications Board		CS/CJ Serial Communications Unit		Common	C200HX/HG/HE Communications Board				Contents
		Allocation Area					Special Auxiliary Area				
		Port 1 word	Port 2 word	Port 1 word	Port 2 word	Bit	Port A word	Bit	Port B word	Bit	
Trace	Trace Execution Flag (each port)	CIO 1909	CIO 1919	n+9	n+19	12	CIO 286	00	CIO 286	01	1: Executing 0: Stop
	Continuous Trace Start/ Stop Switch (each port)	CIO 1900 Bit 01	CIO 1900 Bit 09	n bit 01	n bit 09		CIO 289	02	CIO 289	03	0 to 1: Start 1 to 0: Stop (Only used with CX-Protocol)
	Short Trace Start/Stop Switch (each port)	CIO 1900 Bit 02	CIO 1900 Bit 10	n bit 02	n bit 10		CIO 289	04	CIO 289	05	0 to 1: Start 1 to 0: Stop (Only used with CX-Protocol)
Abort	Forced Abort Switch (each port)	CIO 1900	CIO 1900	n	n	Port 1: 03 Port 2: 11	CIO 289	11	CIO 289	15	Set from 0 to 1 for forced abort (Depending on the timing, the operation may not abort and the sequence will complete.)
	Forced Abort Generated Flag	CIO 1909	CIO 1919	n+9	n+19	13	None		None		1: Forced abort executed 0: All other times
Wait	Sequence Waiting Flag (each port)	CIO 1909	CIO 1919	n+9	n+19	09	None		None		1: Sequence waiting 2: Sequence not waiting
	Wait Release Switch (each port)	CIO 1900	CIO 1900	n	n	Port 1: 0 Port 2: 8	None		None		0 to 1: Wait release
Transfer control signal monitor	RTS Signal Status	CIO 1907	CIO 1917	n+7	n+17	03	None		None		1: ON 0: OFF
	CTS Signal Status	CIO 1907	CIO 1917	n+7	n+17	04	None		None		1: ON 0: OFF
	DSR Signal Status	CIO 1907	CIO 1917	n+7	n+17	06	None		None		1: ON 0: OFF
	DTR Signal Status	CIO 1907	CIO 1917	n+7	n+17	07	None		None		1: ON 0: OFF
	Local Node Reception Busy/Waiting to Receive	CIO 1907	CIO 1917	n+7	n+17	08	None		None		1: Local node reception busy 0: Local node waiting to receive
	Remote Node Reception Busy/Waiting to Receive	CIO 1907	CIO 1917	n+7	n+17	10	None		None		1: Remote node reception busy 0: Remote node waiting to receive

Type	Name	CS Serial Communications Board		CS/CJ Serial Communications Unit		Common	C200HX/HG/HE Communications Board				Contents
		Allocation Area					Special Auxiliary Area				
		Port 1 word	Port 2 word	Port 1 word	Port 2 word	Bit	Port A word	Bit	Port B word	Bit	
Transfer Error Generated Status (Port Communications Error)	No Error	CIO 1908	CIO 1918	n+8	n+18	00 to 15	CIO 283	00 to 03 0: No error	CIO 283	08 to 11 0: No error	All 0
	Parity Error	CIO 1908	CIO 1918	n+8	n+18	02	CIO 283	00 to 03 1: Parity error	CIO 283	08 to 11 1: Parity error	1: Parity error 0: Normal Does not turn ON in C200HE/HX/HG protocol macro mode
	Framing Error	CIO 1908	CIO 1918	n+8	n+18	03	CIO 283	00 to 03: 2: Framing error	CIO 283	08 to 11 2: Framing error	1: Framing error 0: Normal Does not turn ON in C200HE/HX/HG protocol macro mode
	Overrun Error	CIO 1908	CIO 1918	n+8	n+18	04	CIO 283	00 to 03 3: Overrun error	CIO 283	08 to 11 3: Overrun error	1: Overrun error 0: Normal Does not turn ON in C200HE/HX/HG protocol macro mode
	Timeout Error	CIO 1908	CIO 1918	n+8	n+18	05	CIO 283	00 to 03 5: Timeout error	CIO 283	08 to 11 5: Timeout error	1: Timeout error (Tls, Tfr, or Tr) 0: Normal Does not turn ON in C200HE/HX/HG protocol macro mode
	Command Error	CIO 1908	CIO 1918	n+8	n+18	06	CIO 283	00 to 03 7: Command error	CIO 283	08 to 11 7: Command error	1: Command error (reception data constant comparison does not agree) 0: No command error (Does not turn ON in C200HE/HX/HG protocol macro mode)
	FCS Check Error	CIO 1908	CIO 1918	n+8	n+18	07	CIO 283	00 to 03 4: FCS Check error	CIO 283	08 to 11 4: FCS Check error	1: FCS check error (check codes do not agree) 0: Normal (Does not turn ON in C200HE/HX/HG protocol macro mode)

Type	Name	CS Serial Communications Board		CS/CJ Serial Communications Unit		Common	C200HX/HG/HE Communications Board				Contents
		Allocation Area					Special Auxiliary Area				
		Port 1 word	Port 2 word	Port 1 word	Port 2 word	Bit	Port A word	Bit	Port B word	Bit	
Transfer Error Generated Status (Port Communications Error)	Checksum Error	None		None			CIO 283	00 to 03 6: Check sum error	CIO 283	08 to 11 6: Check sum error	---
Transmission Error Generated Status	Tr (Receive wait monitoring time) Exceeded (each port)	CIO 1908	CIO 1918	n+8	n+18	12	None		None		1: Exceeded 0: Normal
	Tfr (Receive finish monitoring time) Exceeded (each port)	CIO 1908	CIO 1918	n+8	n+18	13	None		None		1: Exceeded 0: Normal
	Tfs (Send finish monitoring time) Exceeded (each port)	CIO 1908	CIO 1918	n+8	n+18	14	None		None		1: Exceeded 0: Normal
	Max. No. of Retries (each port)	CIO 1908	CIO 1918	n+8	n+18	08 to 11	None		None		No. of retries 0 to 9: 0 to 9 hexadecimal
	Communications error (Communications port error)	CIO 1908	CIO 1918	n+8	n+18	15	CIO 283	04	CIO 283	12	1: Communications error 2: Normal

3-10-2 Description of Each Area

Type	Name	Address	Details	Timing		
				Initialization	Set	Reset
System error	PMSU Watchdog Time Error	CS/CJ: Board: A424, bit 00, Unit: A417, bits 00 to 15 C200HX/HG/HE: CIO 268, bit 00	CS/CJ and C200HX/HG/HE: Set to 1 when the PMSU is damaged. Firmly re-secure the PMSU. If the error does not cancel, even after installing the PMSU on another CPU Unit, replace the PMSU.	At power ON (See note 1.)	When error occurs	When power is turned ON again.
	Inner Bus Error	CS: A424 bit 01 (Board only)	CS Board only: Set to 1 when an Inner Bus error occurs. Firmly re-secure the PMSU. If the error does not cancel, even after installing the PMSU on another CPU Unit, replace the PMSU.		When error occurs	When power is turned ON again.

Type	Name	Address	Details	Timing		
				Initial-ization	Set	Reset
System error	Port Recognition Error	C200HX/HG/HE: CIO 268 bit 01	C200HX/HG/HE only: Set to 1 (ON) when a communications port error has occurred. Replace the PMSU.	At power ON (See note 1.)	When error occurs	When power is turned ON again.
	Protocol Data Error	CS/CJ: Board CIO 1901, Unit n+1 words, bit 00 Board only: A424 bit 09 C200HX/HG/HE: CIO 268 bit 02	CS/CJ: Set to 1 (ON) when an error is detected in the Protocol data checksum. At the same time, for a Serial Communications Board, the ERR/ALM indicator on the CPU Unit will flash and the RDY indicator will flash at intervals of 1 s. Auxiliary Word A424, bit 09 will turn ON. For the Serial Communications Unit, the RDY or ERC indicators will light. C200HX/HG/HE: Set to 1 (ON) when an error is detected in the Protocol data checksum. At the same time the ERR indicator on the CPU Unit or the RDY indicator will flash. CIO 268 bit 2 will turn ON. Error is generated when the communications connector comes lose during protocol data transmission or when the power to the PLC is OFF. Using CX-Protocol, resend the protocol data.		When error is occurs	Normal when protocol data is resent.
	Protocol Macro Execution Error	CS: Board only A424 bit 10 (No Unit) C200HX/HG/HE: CIO 268 bit 11 (port B), bit 12 (port A)	CS: Set to 1 (ON) when data read/write area exceeded (error code 3) or protocol macro syntax error (error code 4). C200HX/HG/HE: Set to 1 (ON) for any of the following: No protocol macro function (error code 1), sequence number error (error code 2), data write area exceeded (error code 3), or protocol macro syntax error (error code 4).		When error occurs	When sequence starts
	System Setting Error	CS/CJ: CIO 1906 CIO 1916, n+6, n+16 bit 01, Board only, A424 bit 08 (No Unit) C200HX/HG/HE: CIO 268, bit 15	CS/CJ and C200HX/HG/HE: Set to 1 (ON) when a PLC Setup error occurs in the DM Area. Change the system settings, and turn ON the power again, restart or auto-restart, or execute the STUP instruction (CS/CJ only). Those settings for which there is an error will return to the default settings.		When error occurs	At power ON (See note 1.)
Port operation	Port operating	CS/CJ: CIO 1906, CIO 1916, words n+6, N+16, bit 00 C200HX/HG/HE: None	CS/CJ only: The communications port's serial communications mode is set to Protocol Macro. Set to 0 (OFF) when a protocol data error occurs. Set to 1 (ON) in all other cases.		When error occurs	After protocol data is sent

Type	Name	Address	Details	Timing		
				Initial-ization	Set	Reset
Port operation	Port 1/2 Serial Communications Port Setting Changes Flag (Port Restart Flag)	CS/CJ: Board A636, bit 01/02, Unit A620 + Unit No., bits 01/02 C200HX/HG/HE: CIO 289, bits 00/01	CS/CJ and C200HX/HG/HE: The communications port is restarted when this flag goes from 0 to 1.	At power ON (See note 1.)	User operation or STUP instruc-tion exe-cuted	Setting changes com-pleted or port restart completed
Protocol macro	Protocol Macro Execution Flag	CS/CJ: CIO 1909, CIO 1919, n+9, n+19, bit 15 C200HX/HG/HE: CIO 289, bits 08/12	CS/CJ and C200HX/HG/HE: Set to 1 (ON) when the PMCR instruction (sequence) is executed. Returns to 0 (OFF) if execution fails. Set to 0 (OFF) after sequence is completed and all reception data has been written to I/O memory. Set to 0 (OFF) when sequence is com-pleted (whether sequence is com-pleted normally or using Abort). (See note 2.)		Instruc-tion exe-cuted	Instruc-tion com-pleted
	Protocol Macro Error Code	CS/CJ: CIO 1909, CIO 1919, n+9, n+19, bits 00 to 03 C200HX/HG/HE: CIO 286, bits 08 to 11 or 12 to 15	CS/CJ and C200HX/HG/HE: Error code contents and information are listed on page 147, *Protocol Macro Error Codes*.		When error occurs	When sequence starts
Sequence monitor	Communication Sequence No.	CS/CJ: CIO 1910 CIO 1920, n+10, n+20, bits 00 to 11 C200HX/HG/HE: None	CS/CJ only: The processing com-munication sequence number will be set when the sequence execution starts. It is also set when a Sequence Num-ber Error occurs (error code 2). It is cleared when STUP is executed or the PMSU is restarted.		When sequence starts	None
	Execution Completion Step No. (code)	CS/CJ: CIO 1911 CIO 1921, n+11, n+21, bits 08 to 11 C200 HX/HG/HE: CIO 287 CIO 288, bits 04 to 07	CS/CJ and C200HX/HG/HE: Sets step numbers 0 to 15 (0 to F hexa-decimal) when execution is com-pleted. Cleared when either the sequence starts executing, STUP is executed, or the PMSU is restarted.		When step is executed	When sequence starts
	Execution Completion Step No. Storage Flag	CS/CJ: CIO 1913 CIO 1923, n+13, n+23, bits 00 to 15 C200HX/HG/HE: None	CS/CJ only: Each bit corresponding to step numbers 0 to 15 (bits 00 to 15) for which execution is complete, will be set to 1 (ON). Once a bit has been set it will remain set (ON) dur-ing the sequence (and after comple-tion), so bits corresponding to steps which have been executed will be set to 1 (ON) in order of execution. Cleared when either the sequence starts executing, STUP is executed, or the PMSU is restarted.		When step is executed	When sequence starts

Type	Name	Address	Details	Timing		
				Initial-ization	Set	Reset
Sequence monitor	Execution Completion Matrix Case No. (code)	CS/CJ: CIO 1911 CIO 1921, n+11, n+21, bits 00 to 03 C200HX/HG/HE: CIO 287 CIO 288, bits 00 to 03	CS/CJ and C200HX/HG/HE: Reception matrix case numbers 0 to 15 (0 to F hexadecimal) for which reception is completed will be set. Cleared when either the sequence starts executing, STUP is executed, or the PMSU is restarted. The Execution Completion Matrix Case Number is only stored when the matrix has been designated by the Receive/Send&Receive command. It will be cleared to 0 if there is no matrix or another command is executed.	At power ON (See note 1.)	Matrix	When sequence starts
	Execution Completion Matrix Case No. Storage Flag	CS/CJ: CIO 1912 CIO 1922, n+12, n+22, bits 00 to 15 C200HX/HG/HE: None	CS/CJ only: Each bit corresponding to matrix case No. 0 to 15 (bits 00 to 15) for which reception is complete, will be set to 1 (ON). Cleared when either the sequence starts executing, STUP is executed, the PMSU is restarted, or step is executed. After the matrix Receive command, either the WAIT command can be executed or the sequence completed and the matrix case number confirmed from the ladder program. The corresponding bits for the stored case number will only be set to 1 (ON), for the Execution Completion Receive Number Storage Flag when the matrix has been designated by the Receive/Send&Receive command. It will be cleared to 0 if there is no matrix or another command is executed.		Matrix	When sequence starts
	Current Repeat Count	CS/CJ: CIO 1914 CIO 1924, n+14, n+24, bits 00 to 07 C200HX/HG/HE: CIO 284 CIO 285, bits 00 to 07	CS/CJ and C200HX/HG/HE: Stores the repeat count value N. Cleared when either the sequence starts executing, STUP is executed, the PMSU is restarted, or step is executed. The current value N will differ according to the method for designating initial values. Reset: After starting that step and setting N to 0, execute the set number of retries. Hold: After starting that step set the number of retries while holding the value of N. (See note 3.)		When the repeat count is refreshed	When sequence starts

Type	Name	Address	Details	Timing		
				Initial-ization	Set	Reset
Sequence monitor	Set Repeat Count	CS/CJ: CIO 1914 CIO 1924, n+14, n+24, bits 08 to 15 C200HX/HG/HE: None	CS/CJ only: Stores the attempts (Set number of retries) that are made to execute that step. Cleared when either the sequence starts executing, STUP is executed, the PMSU is restarted, or step is executed.	At power ON (See note 1.)	When step starts	When sequence starts
	Sequence End Completion Flag	CS/CJ: CIO 1909 CIO 1919, n+9, n+19, bit 11 C200HX/HG/HE: CIO 289, bits 10/14	CS/CJ and C200HX/HG/HE: Set to 1 (ON) when sequence processing is completed or the sequence ends due to an error. (See note 4.)		When sequence ends	When sequence starts
	Sequence Abort Completion Flag	CS/CJ: CIO 1909 CIO 1919, n+9, n+19, bit 10 C200HX/HG/HE: CIO 283 CIO 283, bits 07/15	CS/CJ and C200HX/HG/HE: Set to 1 (ON) when sequence processing is completed or is aborted due to an error. 1: Sequence abort completed 0: Sequence abort not completed		When sequence is aborted	When sequence starts
Step error	Step Error Processing Execution Flag	CS/CJ: CIO 1909, CIO 1919, n+9, n+19, bit 14 C200HX/HG/HE: CIO 289, bits 09/13	CS/CJ and C200HX/HG/HE: Set to 1 (ON) when step ends in an error. When processing ends normally after retries, it remains at 0. 1: Step ended in error 0: Step ended normally		When a reception comparison error occurs	When sequence starts
Trace	Trace Execution Flag	CS/CJ: CIO 1909, CIO 1919, n+9, n+19, bit 12 C200HX/HG/HE: CIO 286, bits 00/01	CS/CJ and C200HX/HG/HE: Set to 1 (ON) when send or receive message time series data is being traced using CX-Protocol.		When trace starts	When trace is completed
	Continuous Trace Start/Stop Flag	CS/CJ: CIO 1900/CIO n, bits 01/09 C200HX/HG/HE: CIO 289, bits 02/03	CS/CJ and C200HX/HG/HE: Turns from 0 to 1 when a continuous trace is started using CX-Protocol. Turns from 1 to 0 when the trace stops.		Using CX-Protocol	Using CX-Protocol
	Shot Trace Start/Stop Flag	CS/CJ: CIO 1900/CIO n, bits 02/10 C200HX/HG/HE: CIO 289, bits 04/05	CS/CJ and C200HX/HG/HE: CX-Protocol shot trace starts when it turns from 0 to 1. When the trace buffer is full, the PMSU is cleared. (See note 5.)		Using CX-Protocol	When shot trace is completed
Abort	Forced Abort Flag	CS/CJ: CIO 1900/CIO n, bits 03/11 C200HX/HG/HE: CIO 289, bits 11/15	CS/CJ and C200HX/HG/HE: Turns from 0 to 1 when Protocol Macro processing stops. Depending on the timing, processing may be completed.		User set	User set
	Forced Abort Generated Flag	CS/CJ: CIO 1909, CIO 1919, n+9, n+19, bit 13 C200HX/HG/HE: None	CS/CJ only: Set to 1 (ON) when the Forced Abort Flag is used from the user program. When the Forced Abort Flag is set to ON when the sequence is in the final stages, the sequence will either end or be aborted.		When Forced Abort is generated	When sequence starts

Type	Name	Address	Details	Timing		
				Initial-ization	Set	Reset
Wait	Sequence Waiting Flag	CS/CJ: CIO 1909, CIO 1919, n+9, n+19, bit 09 C200HX/HG/HE: None	CS/CJ only: Set to 1 (ON) when the sequence is waiting due to the WAIT command being issued. Wait status can be set from OFF to ON and move to the next step, by using the Wait Release Flag in the ladder program. (See note 6.)	At power ON (See note 1.)	When the WAIT command is issued	Wait Release Flag is ON or When sequence starts
	Wait Release Flag	CS/CJ: CIO 1900/CIO n, bits 00/08 C200HX/HG/HE: None	CS/CJ only: Set from 0 to 1 when the sequence WAIT command is released.		User set	WAIT command completed
Transfer control signal monitor	Transfer Control Signal Monitor	CS/CJ: CIO 1907, CIO 1917, n+7, n+17, bits 03/04/06/07 C200HX/HG/HE: None	CS/CJ only: Reads the status of the transfer control signals (DTR, DSR, CTS, RTS) for each port. 1: High, 0: Low		Reads status	Reads status
	Remote Node Busy/Waiting to Receive	CS/CJ: CIO 1907, CIO 1917, n+7, n+17, bit 10 C200HX/HG/HE: None	CS/CJ only: Indicates the reception status of the remote note when the Xon/Xoff flow control and RTS/CTS flow control are set for the transmission control parameters. Xon/Xoff flow control clears the reception buffer when the sequence starts, so the remote node reception status is 0. 1: Remote node busy (reception buffer is full, therefore reception no possible) 0: Remote node waiting (reception possible)		Reads status	When busy is released
	Local Node Busy/Waiting to Receive	CS/CJ: CIO 1907, CIO 1917, n+7, n+17, bit 08 C200HX/HG/HE: None	CS/CJ only: Indicates the reception status of the local node (at the PMSU) when Receive is executed, when the Xon/Xoff flow control is set for the transmission control parameters. 1: Local node busy (reception not possible as reception buffer is 4/5 = 2 kbytes min.) 0: Local node waiting (reception possible as reception buffer is 1/5 = 0.5 kbytes max.) This area is cleared when the power is turned ON. It can also be cleared using the STUP instruction or Port 1/Port 2 System Setting Changes Flag (Auxiliary Bit). The area is also cleared when the next sequence is executed.		Reads status	When busy is released

Type	Name	Address	Details	Timing		
				Initial-ization	Set	Reset
Transmission Error Generated Status		CS/CJ: CIO 1908, CIO 1918, n+8, n+18, bits 00 to 15 C200HX/HG/HE: CIO 283, bits 00 to 03, 08 to 11	CS/CJ: When a transmission error occurs the corresponding flag is set to 1 (ON). Bits 00 to 14 are represented by bit 15. The cause of the error or the cause of Send&Receive command retries will be represented in bits 00 to 15. (See note 7.) When communications retries are executed by the Protocol Macro, an error will be recorded in bits 00 to 14, but Transmission Error Generated bit 15 will remain at 0 (OFF). Even if another error occurs during retries, the cause of the error will be held. Bits 00 to 15 are cleared when either the sequence starts executing, STUP is executed, or the power is turned ON. C200HX/HG/HE: When a transmission error occurs in a Protocol Macro, error codes 1, 2, 3 will be stored in bits 00 to 03 or bits 08 to 11. Bit 07 is representative of bits 00 to 03 and bit 15 is representative of bits 08 to 11. The cause of the error or the cause of Send&Receive command retries will be represented in bits 00 to 15. When communications are restored by the Protocol Macro retries, error codes in bits 00 to 03 and bits 08 to 11 will be cleared. Even if another error occurs during retries, the cause of the error will be held. Bits 00 to 15 are cleared when either the sequence starts executing, the power is turned ON, or the PMSU is restarted.	At power ON (See note 1.)	When an error occurs	When sequence starts

Note

1. In the above table, only “at power ON” is shown, but the CPU Unit is cleared in any of the following circumstances. At power ON, When the operating mode is changed (From PROGRAM to RUN or MONITOR), when the STUP instruction is executed, when the PMSU is reset, or when the communications port is restarted. Each area can also be cleared after setting, by using the timing methods shown in the reset column.
2. When the response type is set to “scan,” the Protocol Macro Execution Flag will be set to 0 (OFF) when confirmation is received that the contents of all reception data (with responses) has been written to I/O memory.
3. When the repeat count set value is set using word read R ( ), if 0 is read, 0 will be stored and that step will be skipped (the next processing setting ignored) and forcefully moved to the next step (+1).

4. This flag can be used to distinguish whether or not the sequence was completed normally, by leaving the setting at End (or for an error Abort), after the sequence has been completed.
   1: Sequence End Completion
   0: Sequence End not Completed
5. When the trace function is executed from CX-Protocol, the CPU Unit uses the Shot Trace Start/Stop Flag and the Continuous Trace Start/Stop Flag for the Serial Communications Board and Unit. Do not create ladder programs which set these flags to ON.
6. Set the Wait Release Flag in the ladder program to turn from OFF to ON. When the Force Set Key on the Programming Console is used, the flag will be only ON while the key is being pressed, so it will not be possible to set the protocol macro function from ON to OFF (clear) from the Programming Console.
7. When an error in bits 00 to 14 cause an error in the Protocol Macro, the Transmission Error Generated Flag (bit 15) will turn ON (1).

Protocol Macro Error Codes

Code	Error contents	Protocol macro execution
0	No error	Executed
1	No protocol macro function (C200HX/HG/HE only)	Not executed
2	Sequence number error: The sequence number designated in the PMCR instruction does not exist in the PMSU.	Not executed
3	Data write/read area exceeded error: When data was written to or read from the CPU Unit, data exceeded the range of the designated data area.	Execute aborted after error occurs.
4	Protocol data syntax error: During Protocol Macro execution, a code which could not be executed was found. (E.g.: There was a header after the terminator.)	

CS/CJ

For the Serial Communications Board, when an error code 3 or 4 is recorded, A42411 (Protocol Macro Syntax Error) will turn ON (1), the CPU Unit ERR/ALM indicator will flash and a continuous error will be generated. For the Serial Communications Unit, the ERC indicator will flash. All other error codes are not used.

When an error occurs, the error code will be stored until the next sequence starts. The error will be cleared when either the STUP instruction is executed, the PMSU is restarted, or the next sequence is executed.)

Note To reset the cause of a continuous error when an error code 3 or 4 is generated for the Serial Communications Board, the error display will be cleared after one of the following operations is performed.

- The next sequence is executed.
- The STUP instruction is executed.
- Restart.
- The CPU Unit is set to PROGRAM mode.

C200HX/HG/HE

When error codes 1,2,3, or 4 are recorded, CIO 268 bits 11/12 will turn ON (1) (PMCR execution error), the CPU Unit ERR indicator will flash and a continuous error will be generated. When an error occurs, the error code will be stored until the next sequence starts.

The error will be cleared when either the STUP instruction is executed, the PMSU is restarted, or the next sequence is executed. After removing the cause of the error, it will also be necessary to perform an error resetting operation from a device such as a Programming Console.

Additional Notes and Precautions

Time Delay

When a half-duplex send operation is performed (CS/CJ only), there is a time delay (see *t1: Timing List* below) between when the actual data transmission processing is completed and the send operation is completed. If the response from the remote device is early, that is, if the response is received in between the time that the data is transmitted (using a communications command) and when the send operation is completed, with the half-duplex system the data received in this interval (the response) cannot be received. In this case, set to the full-duplex system. If the wiring to the device uses a 2-wire RS-422A/485 system, both transmission data and reception data will be sent along the same wires, so in order to separate the transmission paths to send and receive, a timing of t2 = 150 μs will be necessary. Accordingly, if a 2-wire system connection is used and a high-speed response device is connected so that data is returned within t1 + t2, take measures to slow down the data response from the remote device.

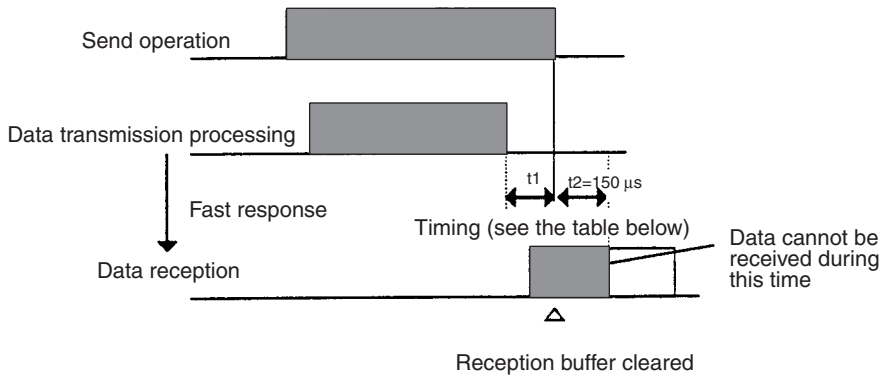

Timing List: t1

Baud rate (bps)	Timing (unit: μs)
1,200	1,116
2,400	578
4,800	288
9,600	144
19,200	73
38,400	36

Error Flags when Overrun Errors, Framing Errors, and Parity Errors are Detected (CS/CJ and C200HX/HG/HE)

When any of the above errors are detected in the protocol macro function, the information on the status of the reception data error will be stored in the reception buffer. Whether or not the appropriate error flag will turn ON depends on the following conditions.

- When error information data is included in the data which matches the reception expected message.

  When the receive operation is performed, the reception buffer is searched for a reception expected message, and if the data matches this, it will be treated as reception data. If this reception data contains error information, all the error flags will turn ON. In the following example,100 bytes of data matching the reception expected message were received.

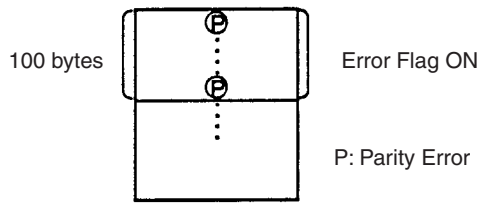

- When error information data is included in the data which does not match the reception expected message.

  If this data does not match the reception expected message and contains error information, the data will be corrupted and the error flag status will not change.

  For trace information, all error information obtained from the reception buffer will be stored within the trace data capacity range (CS/CJ only). In the following example, data which did not match the reception expected message contained a parity error.

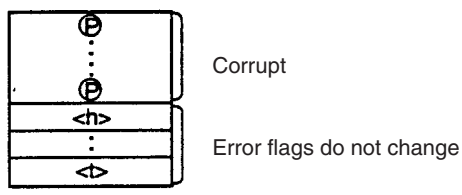

Reception Buffer (CS/CJ Only)

With the protocol macro function each port has a reception buffer of up to 2.5 kbytes. To receive a large volume of data at one time or when the transmission sequence is waiting, use a reception buffer with a large capacity. If the reception buffer is already full and data is received, data will exceed the 2.5 kbytes of capacity and will overwrite existing data in the buffer. For this reason, always be sure to use the flow control setting.

With the full-duplex system, the reception buffer will be cleared immediately before the sequence is executed. The reception buffer receives data while both Send and Receive commands are being executed and the data is treated as macro data.

Relationship between the Flow Control and the Maximum No. of Words of Reception/Transmission Data (CS/CJ Only)

One Serial Communications Board or Unit has a reception buffer of 2.5 bytes. Flow control will be set to start at the point when the reception buffer contains approximately 2 bytes of data, and flow control will be released when approximately 0.5 bytes of reception data have been processed.

Set the reception buffer so that it can receive a maximum of 2 kbytes of reception data at a given time, and by setting the Receive command to receive a maximum of 1,000 bytes (03E8 hexadecimal) of transmission data at any given time, it is possible to store data in units of 1,000 bytes (500 words) maximum.

SECTION 4
Using the Protocol Macro Function

This section describes various precautions in using the protocol macro function.

4-1 Applicable Range of the Protocol Macro Function 152
4-1-1 CS/CJ 152
4-1-2 C200HX/HG/HE 153
4-2 Protocol Creation Process. 154
4-2-1 Creating Communications Sequence Flowcharts. 154
4-2-2 Disassembling into Sequences and Steps. 154
4-3 Transmission Control Mode Setup 157
4-4 Ladder Programming Method 160
4-4-1 CS/CJ 160
4-4-2 C200HX/HG/HE 166
4-5 Calculation Method of Monitoring Time 171
4-6 Operation Confirmation 173
4-7 Errors at the Protocol Execution. 175
4-7-1 CS/CJ 175
4-7-2 C200HX/HG/HE 183
4-8 Communications Response Time Performance 184
4-8-1 CS/CJ 185
4-8-2 C200HX/HG/HE 193
4-9 Cycle Time Performance 201

4-1 Applicable Range of the Protocol Macro Function

4-1-1 CS/CJ

Using the Protocol Support Tool allows users to create several communications sequence (or protocol) compatible with communications control modes discussed in this section. However, they are not compatible with communications control modes such as the synchronous communication, frame synchronous mode (HDLC: High-level Data Link Communications), etc.

Transmission mode	Half-duplex or full-duplex
Synchronizing mode	Start-step synchronization mode
Transmission control mode	Contention mode (Point-to-point connection) Polling selecting mode (Point-to-multi-point connection) Modem control mode
Flow control mode	Software flow: Xon/Xoff flow control Hardware flow: RTS/CTS flow control
	Delimiter control
Transmission error control mode	LRC, LRC2, CRC-CCITT, CRC-16, SUM, SUM1, SUM2
Message format	Header + Address + Length + Data + Check Code + Terminator **or** Header + Address + Length + Data + Terminator + Error Check Code

- The maximum message length can be set to a desired value in a range from 200 to 1,000 bytes based on the allocated DM area of the PMSU. The default is 200 bytes. A message exceeding 1,000 bytes cannot be sent or received.
  When using a wildcard (*) for the data length, the maximum receive message length will be the same as this length setting (200 to 1000 bytes).
- Data calculation functions are available only for the calculation of seven kinds of error check codes, calculation of frame length for sending data, and conversion between ASCII and hexadecimal data only. Other calculations or conversions will be handled by the ladder program, if necessary.
- The DTR signals can be turned ON or OFF under modem control.
- Data can be retrieved from the receive buffer as a receive message in the length set in the expected receive message.
- When the transmission mode is half-duplex, data in the receive buffer will be cleared right before a sequence is executed or send command is executed.
  When the transmission mode is full-duplex, data in the receive buffer will be cleared only right before a sequence is executed.
- Maximum number of processes that can be branched according to received data (sent command, etc.) is 15. If more branches are necessary, use the ladder program.

4-1-2 C200HX/HG/HE

Using the Protocol Support Tool allows users to create several communications sequence (or protocol) compatible with communications control modes discussed in this chapter. However, they are not compatible with communications control modes such as the full-duplex, the synchronous communication, frame synchronous mode (HDLC: High-level Data Link Communications), etc.

Transmission mode	Half-duplex
Synchronizing mode	Start-step synchronization mode
Transmission control mode	Contention mode (Point-to-point connection) Polling selecting mode (Point-to-multi-point connection) Modem control mode
Flow control mode	Software flow: Xon/Xoff flow control Hardware flow: RTS/CTS flow control
	Delimiter control
Transmission error control mode	LRC, CRC-CCITT, CRC-16 (see note), SUM, SUM2 (see note)
Message format	Header + Address + Length + Data + Error Check Code + Terminator **or** Header + Address + Length + Data + Terminator + Error Check Code (see note)

Note It is valid only when the Communications Board is the C200HW-COM□□-EV1.

- The message length must be 256 bytes or less. For a message whose length is 257 bytes or more, the data exceeding 256 bytes cannot be sent or received.
- Data calculation functions are available only for the calculation of five kinds of error check codes, the frame length to be sent, and the numeral data conversion between ASCII and hexadecimal data only. Other operations or conversions will be handled by the ladder program, if necessary.
- The signal line cannot be controlled optionally by any mode other than the modem control and the RTS/CTS flow control.
- A process that determines the number of receiving bytes by using the beginning data of a received frame is infeasible.
- The data in the buffer is cleared before the sequence execution and after the receive command execution. Therefore, a process that reads bytes one by one from the content of receive buffer cannot be used.
- Maximum number of processes that can be branched according to received data (sent command etc.) is 15. If more branches are necessary, use the ladder program.

4-2 Protocol Creation Process

4-2-1 Creating Communications Sequence Flowcharts

- Create the status transition chart of communications sequence.
  Before creating a protocol by using the Protocol Support Tool, users are recommended to first draw such a status transition charts to illustrate the communications sequences with the communicating machine as shown below as an example. Then, users can convert them to “sequences” and “steps” editable by the Protocol Support Tool.

Example:

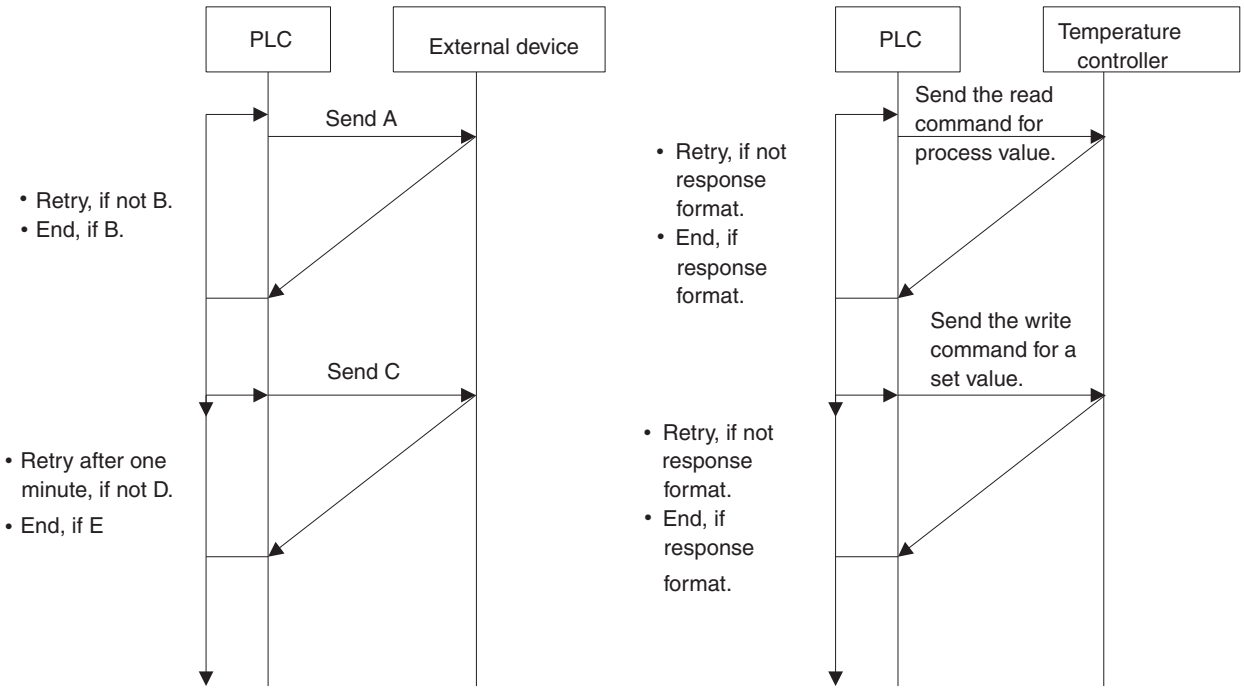

4-2-2 Disassembling into Sequences and Steps

- Disassembling the protocol into “sequences” and “steps” to be editable by the Protocol Support Tool.
  - Disassemble into sequences
    Take out a block from the above process as a “sequence” which is to be started (or switched) by the ladder program.
    For example, either “Read the process value of temperature controller” or “Write the set value of temperature controller” becomes a “sequence.”

- Disassemble into steps
  Disassemble sequences into squares (steps) as shown below:

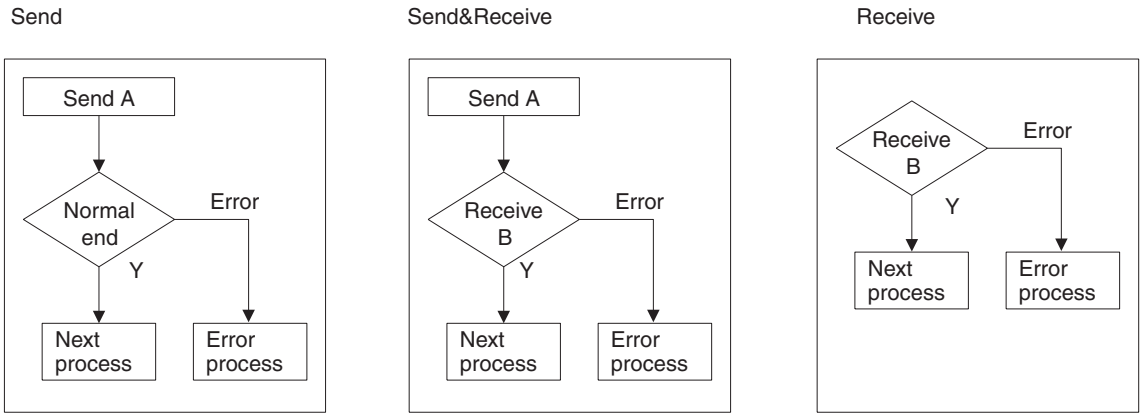

Send&Receive (Matrix)

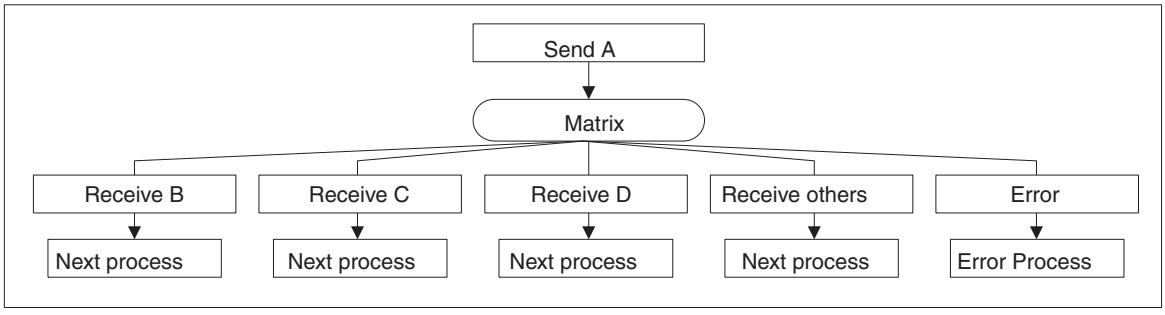

Receive (Matrix)

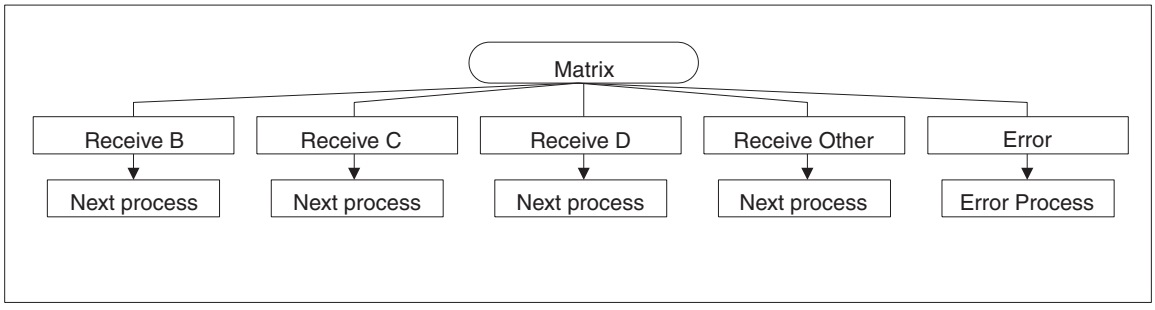

Example 1:

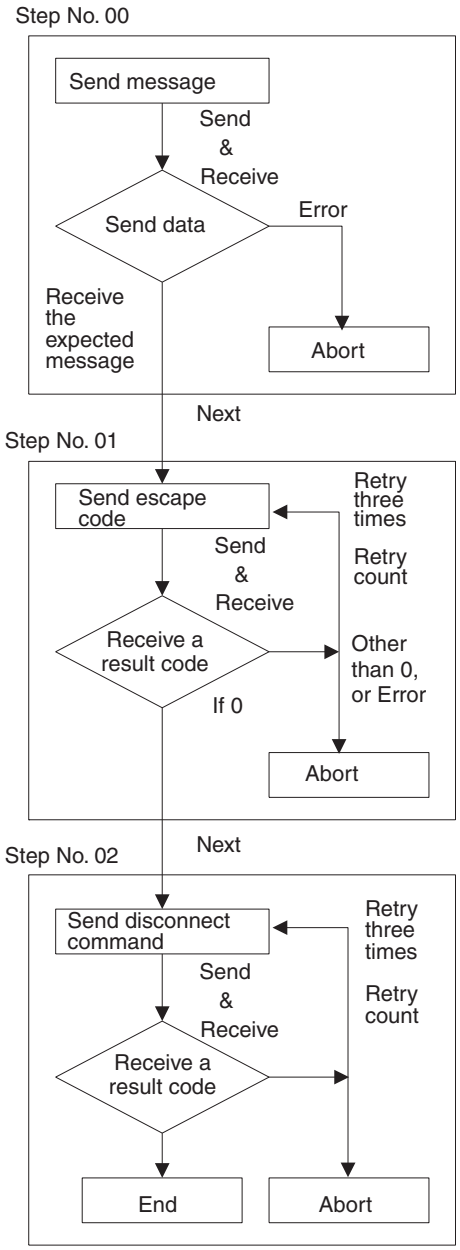
Step No. 00
Send message
Send
&
Receive
Send data
Error
Receive
the
expected
message
Abort
Next
Step No. 01
Send escape
code
Retry
three
times
Send
&
Receive
Retry
count
Receive a
result code
Other
than 0,
or Error
If 0
Abort
Next
Step No. 02
Send disconnect
command
Retry
three
times
Send
&
Receive
Retry
count
Receive a
result code
End
Abort

Example 2:

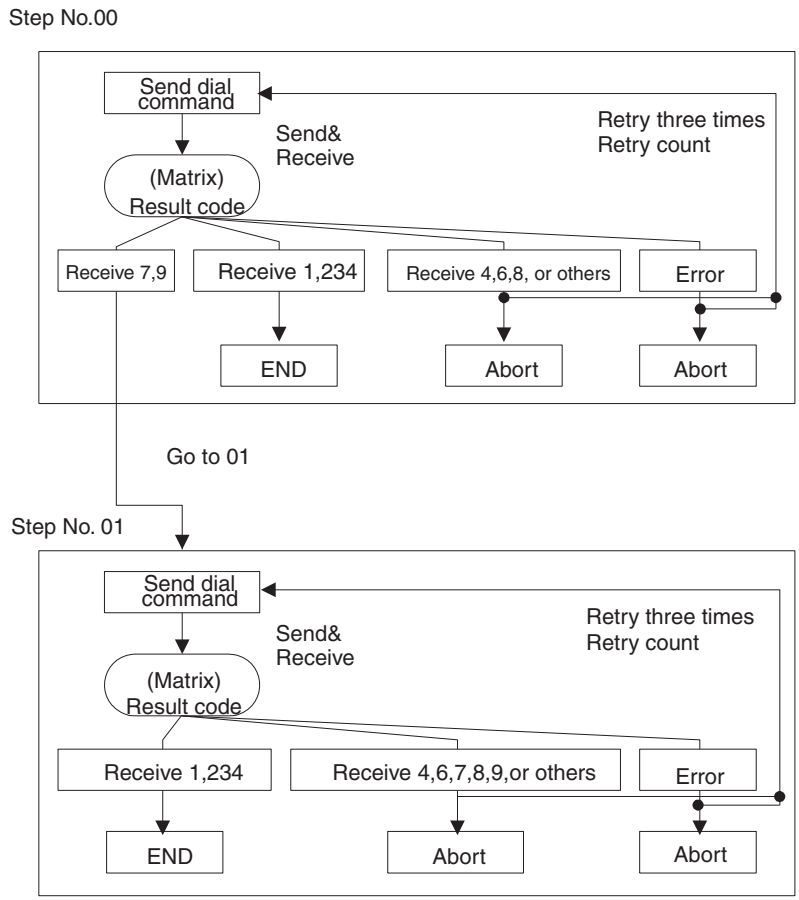

When configuring the steps, the enough consideration is necessary not only for the normal course (the process is completed in normal) but for the error course (the process is terminated by error). The error courses are often set to be aborted (intermittent process stop) all together. However, if the abort is set as the simple “other than normal course,” the process stops there.

Add the description to switch from the error course to the normal course by setting Next and Goto as much as possible if the error cause is predicted and the process can be continued by the other steps even if the errors occur.

Besides, if the error causes are identified, the debug will be easy even when the recovery is impossible by describing the steps. For example, for a device such as a modem which returns the specific result codes, the result codes can be set in the matrix in order to confirm the sent result codes and to ease the error cause identification.

4-3 Transmission Control Mode Setup

The Protocol Macro function supports such transmission control modes as the flow control (Xon/Xoff flow control by software and RTS/CTS flow control by hardware), delimiter control, contention control, and modem control. Note that the system cannot freely control the signal line through another mode.

Examples of their general use are as follows:

- The external device is compatible with the RTS/CTS flow control. Select the RTS/CTS flow control.
- The external device is compatible with the Xon/Xoff flow control. Select the Xon/Xoff flow control.
- The connection in one-to-n configuration is used for the external device.Select the modem control.

- The external device is a modem.
  Select the modem control.
- The external device is a modem compatible with the RTS/CTS flow control (or the Xon/Xoff flow control).
  Select both the modem control and the RTS/CTS flow control (or the Xon/Xoff flow control).
- The external device compatible with the RTS/CTS flow control (or the Xon/Xoff flow control) is connected in 1:N configuration.
  Select both the modem control and the RTS/CTS flow control (or the Xon/Xoff flow control).

Note

The RTS/CTS flow control sets the CTS signal from the receiving terminal to "OFF" to stop the data sending temporally when the receiving speed exceeds the processing in a no-procedural communication. When the receiving process finished, it sets the CTS signal to "ON" again to resume the sending.
This control is a kind of hardware flow control. The signal line of RS-232C cable is used.

The Xon/Xoff flow control sends the Xoff (13H) signal from receiving terminal to temporarily stop data sending when the receiving speed exceeds the processing capacity in no-procedural communications. When the receiving process becomes available, it sends the Xon (11H) signal to start the data sending again. This is a kind of software flow controls. (However, the Xon and the Xoff signals are control codes, therefore they might be included in the sending data if it is binary. On the contrary, the Xon and the Xoff signals may be mixed in the data. Thus, this control is not used for a binary data communications).

The modem control is a specific function to the Protocol Macro function.
It sets DTR signal to "ON" from the start of Protocol Macro execution through the end.
It sets RTS signal to "ON" during the data sending.

The contention control is a data transmission mode which establishes a data link from the data sending terminal before the communication. Since mutually communicating terminals have equal priority, either terminal can establish the link to send data anytime.

The delimiter control sends a delimiter, which has been set by the send code, at the end of the send data if no terminator is defined for the send message. At the next step, it does not send until it receives a delimiter, which has been set by the receive code, from the communicating terminal.
If a terminal received a delimiter set by the receive code, it sends a delimiter set by the send code and continues the data receiving.
When the received data exceeds 200 bytes (for the C200HX/HG/HE) or exceeds the maximum receive bytes (for the CS/CJ) in the RTS/CTS flow control, the Xon/Xoff flow control, or the delimiter control mode.

For the C200HX/HG/HE

The received data is 200 bytes maximum a step in the RTS/CTS flow control, the Xon/Xoff flow control, or the delimiter control. If more than 200 bytes of data are expected to be received, it will necessary to design the sequence to receive them using multiple steps.

Example: When receiving 300 bytes.

Step No.	Command	Send message	Receive message	Next process
00	Send& Receive	A command	200 bytes	Next
01	Receive	---	100 bytes	End

For the CS/CJ

With the CS/CJ protocol, the maximum number of receive bytes per step is 1,000 bytes in the RTS/CTS flow control, Xon/Xoff flow control, or delimiter control as in the case where these control modes are not specified. (The maximum number of bytes for the send/receive message handled by the protocol macro can be set in a range from 200 to 1,000 bytes by setting the allocated DM area for the PMSU.)

Note on the selection of the contention control mode

When the contention control mode is set, the send request code is automatically sent at the beginning of the sequence, the successive process has to be set in the sequence.

- When the communicating partner does not have a priority. (Execute the communications process after the receipt of partner's receive permission code)

Step No.	Command	Send message	Receive message	Next process	Error process
00	Receive	---	Receive permission code	Next	Goto00
01	Send&Receive	Data send	Data receive	End	Abort

- When the communicating partner has a priority.
  (Send the receive permission code if the received data is not the partner's receive permission code)

Step No.	Command	Send message	Receive message	Next process	Error process
00	Receive	---	Receive permission code	Next	Goto02
01	Send&Receive	Data send	Data receive	End	Abort
02	Send&Receive	Receive permission code	Data receive	Next	Abort
03	Send	Data send	---	End	Abort

4-4 Ladder Programming Method

4-4-1 CS/CJ

- To avoid executing a PMCR instruction while another PMCR instruction is being executed, the Communications Port Enabled Flag should be switched from the normally open input condition to the normally closed input condition.
- Perform the sequence execution result read process and the sequence error termination process under the condition that the Protocol Macro Execution Flag is cleared.

Note Before executing a PMCR instruction with the CS/CJ Series, ensure that the serial communications mode for the communications port to be used is set to protocol macro. If a PMCR instruction is executed with the port set to Host Link (SYSWAY), messages that cannot be understood by the application will be output from the serial communications port.

Example:

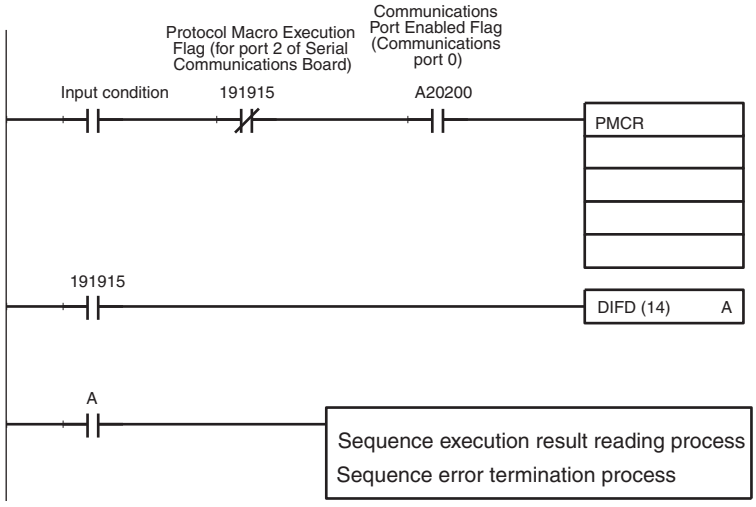

Example: The execution of the protocol Temperature Controller (E5□K Read System) Sequence No. 000 (read process value)

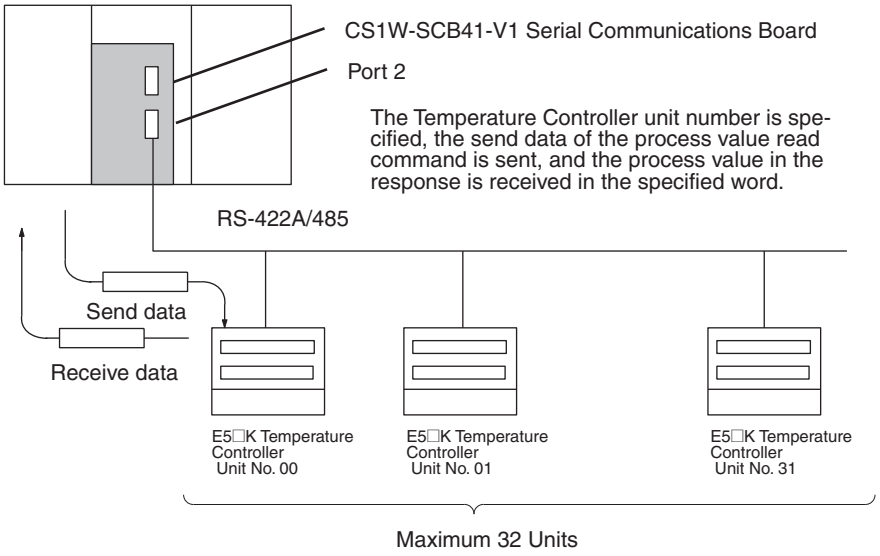

- **The Send/Receive Word Allocation Contents of the Sequence No. 000 (read process value)**

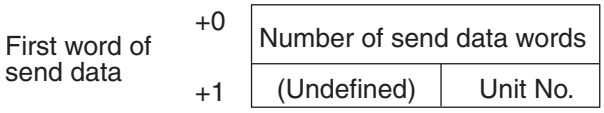

Offset	Contents (data format)	Data
+0	Number of send data words (4 digits hexadecimal)	0002 (fixed)
+1	Unit No. (2 digits BCD)	00 to 31

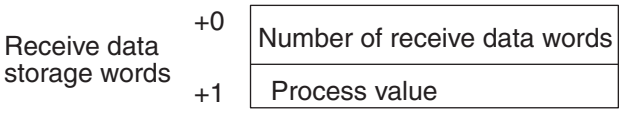

Offset	Contents (data format)	Data
+0	Number of receive data words (2 digits hexadecimal)	0002
+1	Process value (4 digits BCD)	Scaling (lower limit to upper limit)

- **PMCR Instruction Operand Setting Contents**

  In this case, the Unit No. 03 E5□K process value is read, received and, stored in DM 0201:

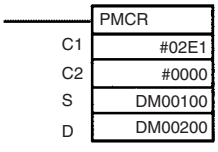

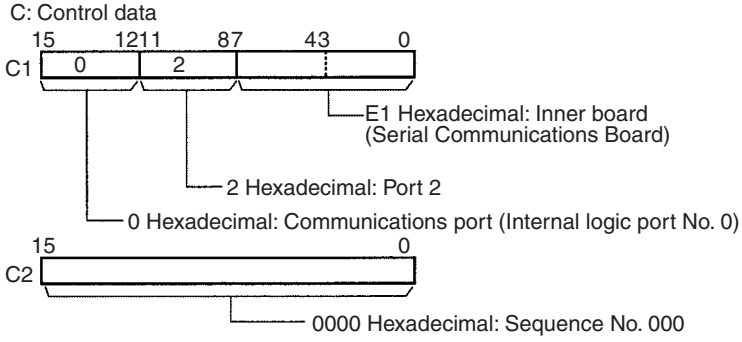

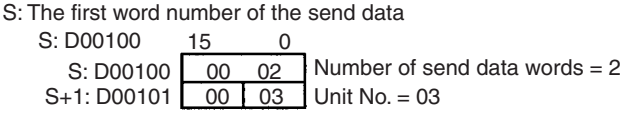

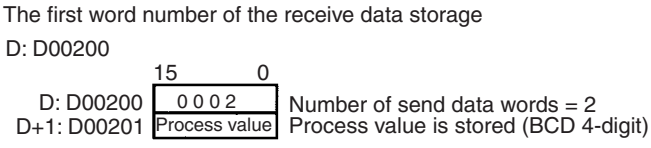

- **Example of the Ladder Program Creation**

  The following example shows that the protocol "Controller (E5_K read)" Sequence No. 000 ("Process value read") is executed by the PMCR instruction and the read process value is transferred to another word at the normal completion of the sequence.

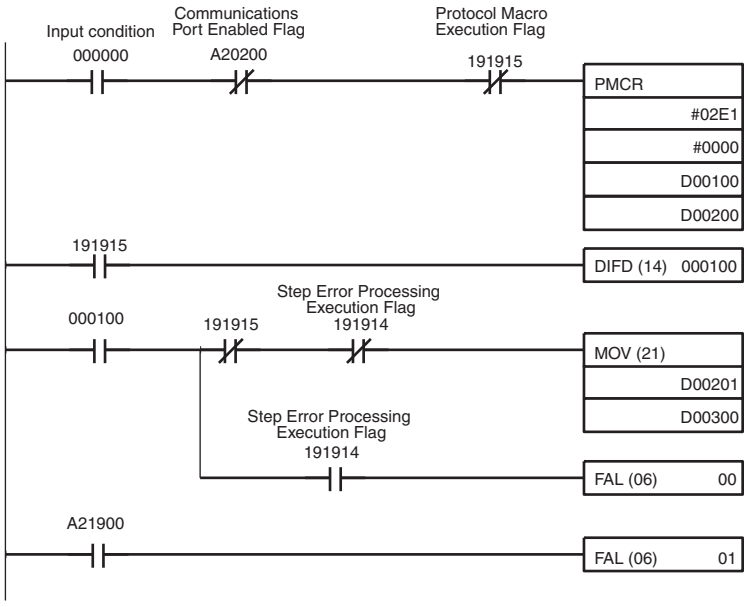

When the input condition 000000 is ON, the Communications Port Enabled Flag A20200 is turned OFF, and the Protocol Macro Execution Flag 191915 is turned OFF, the sequence No. 000 is executed at port 2 of Serial Communications Board, and the process value is stored in D00201.

When the Protocol Macro Execution Flag 191915 is cleared from ON to OFF, 000100 changes from OFF to ON (remains unchanged to be ON during 1 cycle).

The process value received in D00201 is transferred to D00300 when 000100 is ON, Protocol Macro Execution Flag 191915 is turned OFF, and the Step Error Processing Execution Flag 191914 is turned OFF.

If the Step Error Processing Execution Flag 191914 is ON when 00100 is ON (sequence termination), the FAL instruction (Failure Alarm instruction) will be executed as the sequence error termination.

If the Communications Port Execution Error Flag A21900 is ON, the FAL instruction will be executed.

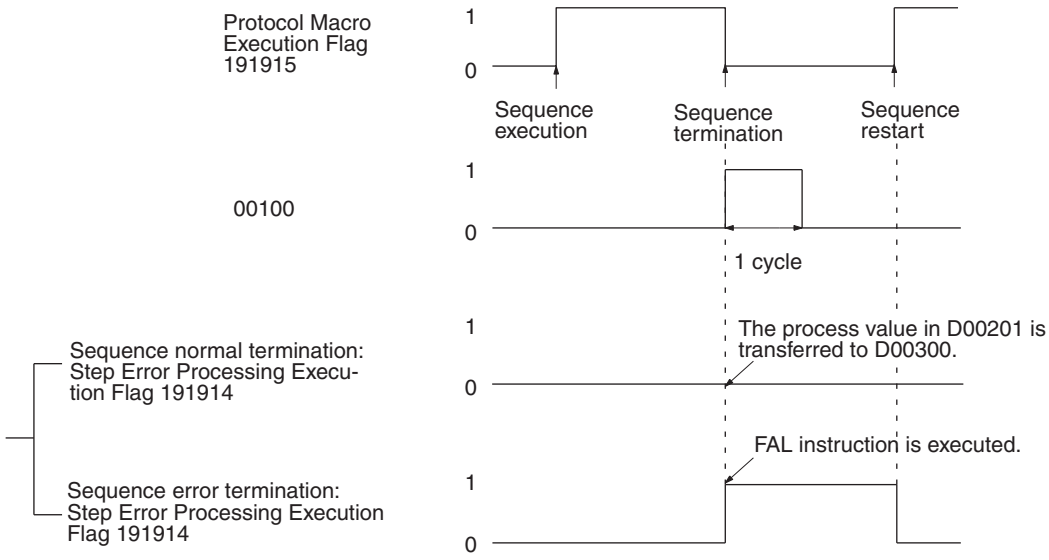

Application of the Receive Data Storage Area before PMCR Execution

The receive buffer is cleared to 0 right before a communications sequence is executed at the time of PMCR execution. Therefore, if a ladder program that constantly reads the process data as shown in the following example is created, the process value data will be momentarily cleared to 0 if data cannot be read due to a reception error.

There is a function that reads and sets data from the I/O memory area of the CPU Unit for a number of words of the first "m" in the receive area right before the communications sequence is executed. This is done in order to hold the received data when a reception error occurs. With this function, the process value data will not be cleared to 0 and the data that existed just before reception failure can be retained.

Specify the number of words of data to be retained in "m." If set to 0 or 1, the data received will not be retained and cleared to 0.

Example The following protocol sends or receives data once and constantly or periodically executes the PMCR instruction for reading the received data according to the ladder program.

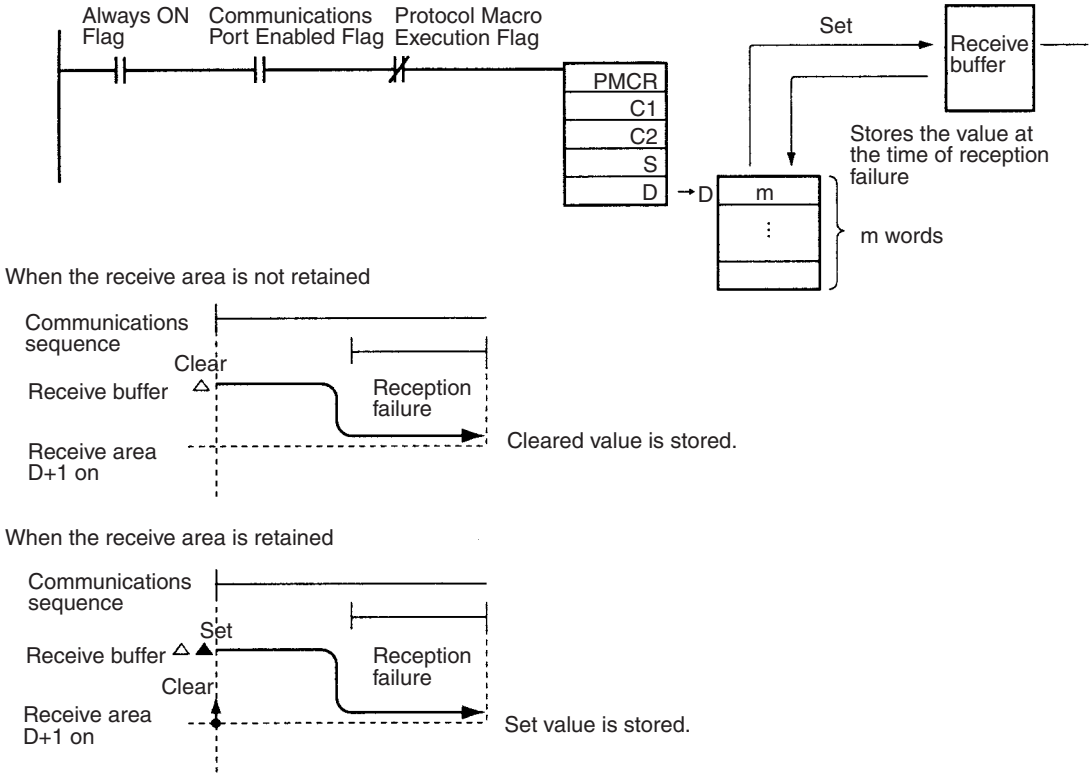

Functions of the Receive Data Storage Area

Use the receive data storage area according to the following procedure.

1,2,3...

1. The 250 words of the PMSU receive buffer of the PMSU is cleared to 0 right after the PMCR instruction is executed.
2. Before the communications sequence is executed, data (starting from D+1) for the number of words (D value–1) in the I/O memory is overwritten on the receive buffer (except at the beginning). The receive buffer considers this as the initial value and waits for the results of Receive processing. The contents of the receive buffer that exceed the number of words for D remain as the initial value of 0000 hexadecimal. (If the number of words is specified to be 00, the whole area remains as the initial value of 0000 hexadecimal.
3. As the result of Receive processing, received data starting from the designated first (offset) word is stored in this receive buffer (except the beginning). The stored data is compared with the expected message. If the response is not written, the received data is kept in the receive buffer and is not stored in the CPU Unit.
4. If the response is written, the received data (except at the beginning) in the receive buffer will be stored in the I/O memory area (starting from D+1). The number of words (including D itself) to the maximum position of the

stored data is stored in D. (The number of words within D is updated every time data exceeding the maximum position is stored.)

5. The previous steps 3 and 4 are repeated until the protocol macro completes its operation.

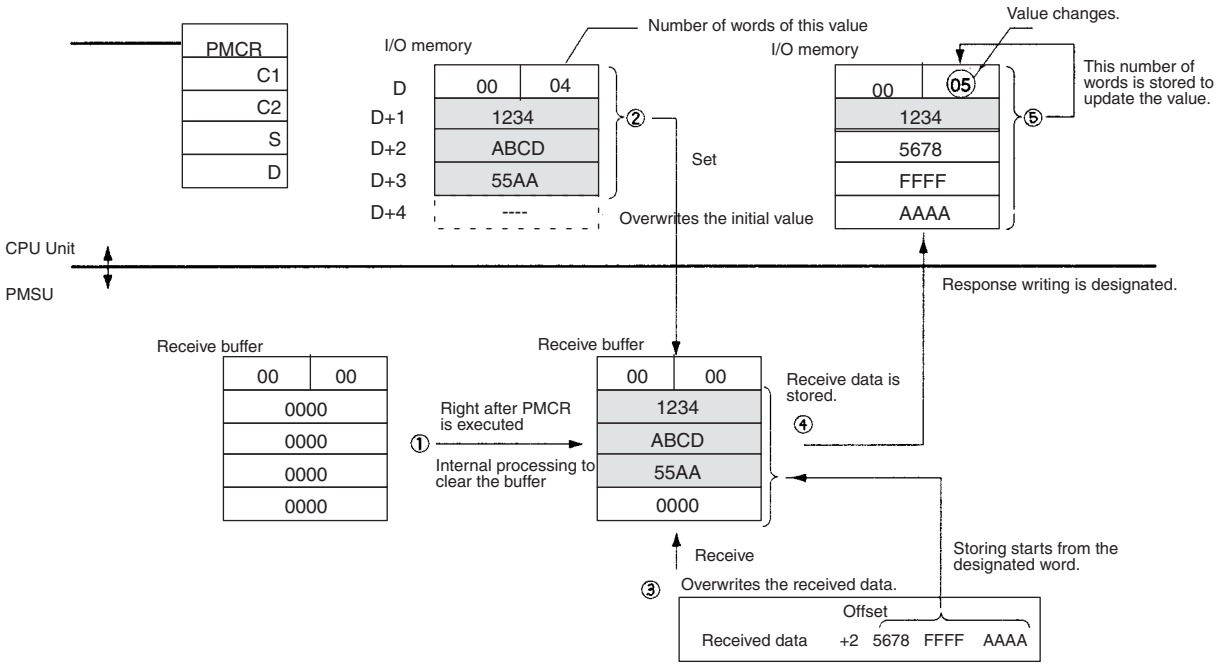

Sequence Error Termination Process

If the End is set for the normal sequence termination and the Abort is set for the error termination as follows, either the normal sequence termination or the error termination can be identified by the Sequence End Termination Flag and the Sequence Abort Termination Flag.

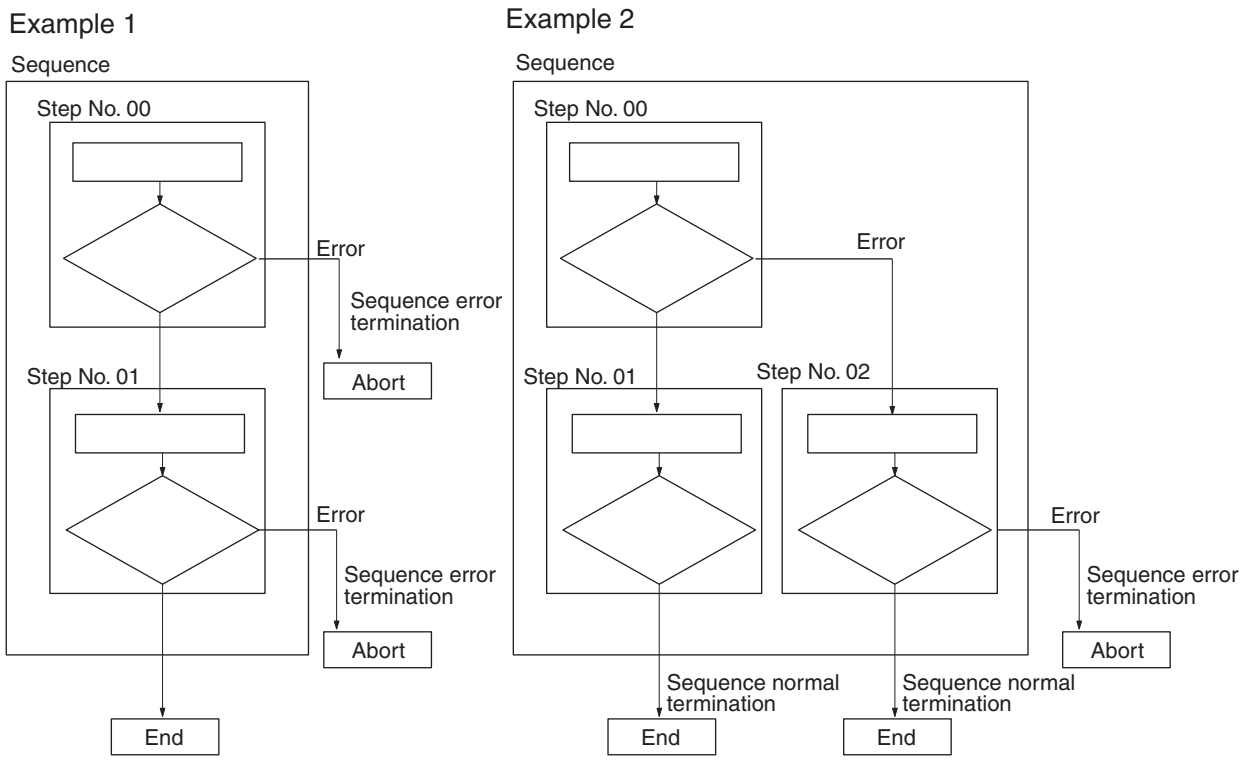

Example: Port 1 of the Serial Communications Board

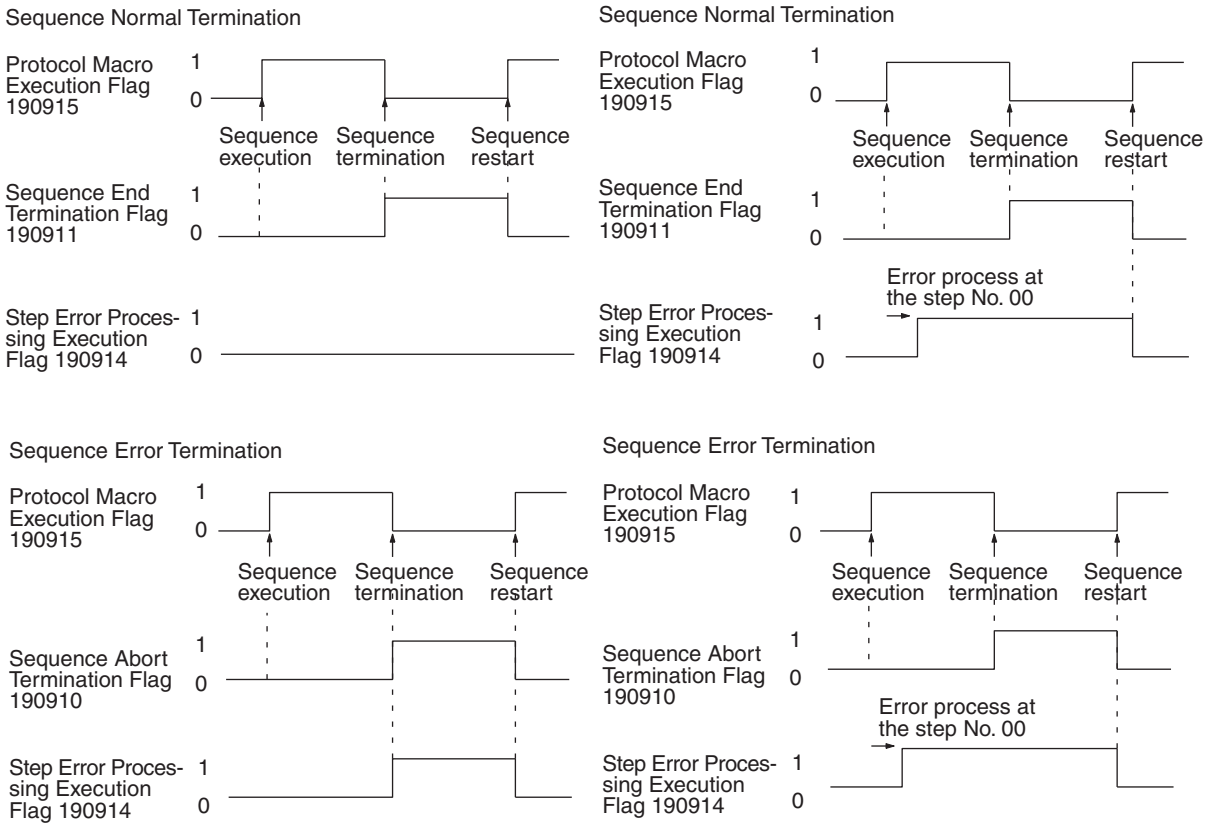

Note 1. The Step Error Processing Execution Flag is not a flag for the whole sequence, but a flag to determine whether the error process is executed at a step in the sequence. Therefore, as in the above example 2, if the consec-

utive step terminates normally after error process execution during the sequence (step No. 00), the Flag will remain unchanged at 1 (ON). Thus it should be kept in mind that this Flag is not always useful as an error termination flag for the whole system.

2. Use the Forced Abort Flag while keeping the following points in mind:
   A sequence under execution can be forced to stop by using the forced abort switch. When the switch is changed from OFF to ON using the ladder program or Programming Console, the protocol macro function changes the Forced Abort Flag from OFF to ON and then changes the Protocol Macro Execution Flag and the forced abort switch from ON to OFF.
   Therefore, do not turn the forced abort switch from ON to OFF using the ladder program or Programming Console.

4-4-2 C200HX/HG/HE

- The Instruction Execution Flag should be set to the normally closed input condition in order to avoid another PMCR instruction execution during PMCR instruction execution.
- Perform the sequence execution result read process and the sequence error termination process under the condition that the Instruction Execution Flag has been cleared.

Example:

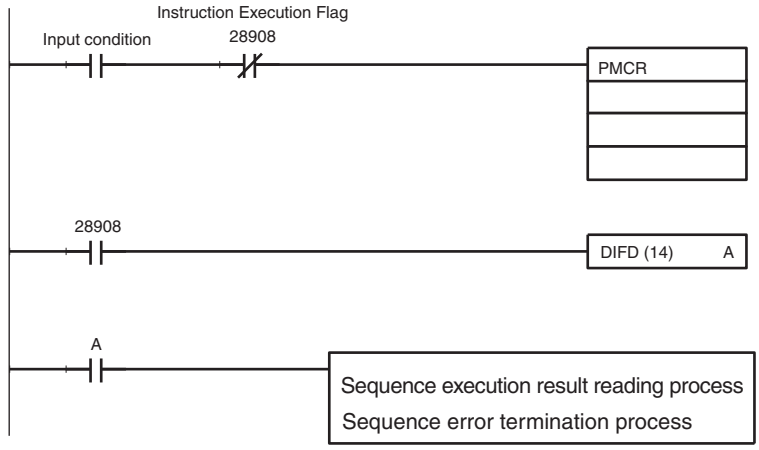

Example: Execution of the protocol name “Controller (E5_K read)” Sequence No. 000 (“Process value read”)

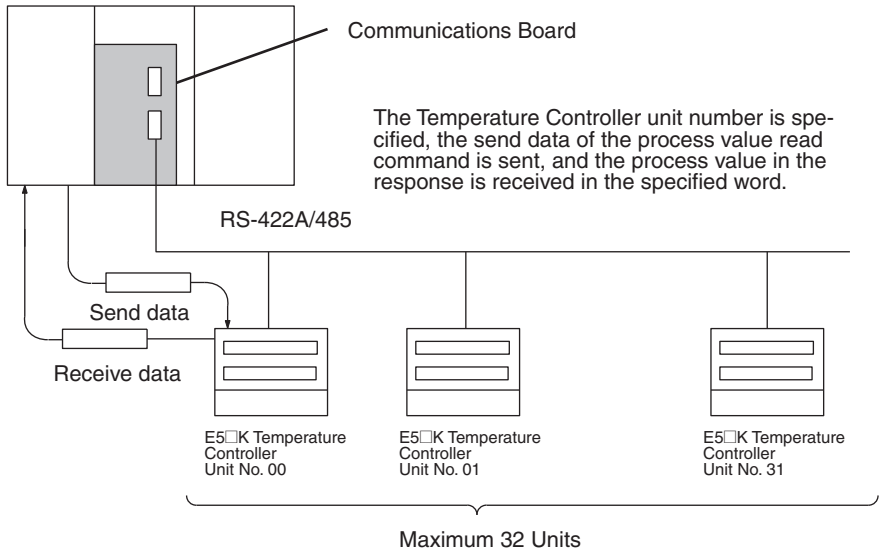

- **The Send/Receive Word Allocation Contents of the Sequence No. 000 ("Process value read")**

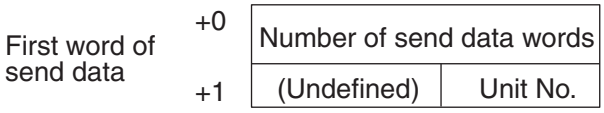

Offset	Contents (data format)	Data
+0	Number of send data words (4 digits BCD)	0002 (fixed)
+1	Unit No. (2 digits BCD)	00 to 31

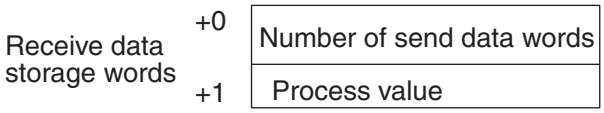

Offset	Contents (data format)	Data
+0	Number of receive data words (4 digits BCD)	0002
+1	Process value (4 digits BCD)	Scaling (lower limit to upper limit)

- **PMCR Instruction Operand Setting Contents**
  In this case, the Unit No. 03 E5□K process value is read, received and stored in the DM 0201:

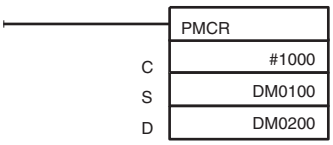

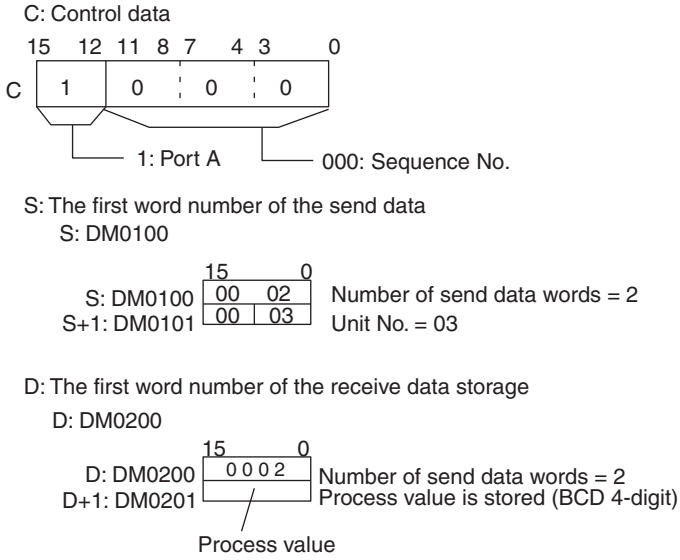

- **Example of the Ladder Program Creation**
  The following example shows that the protocol name “Controller (E5_K read)” Sequence No. 000 (“Process value read”) is executed by the PMCR instruction and the read process value is transferred to another word at the normal completion of the sequence.

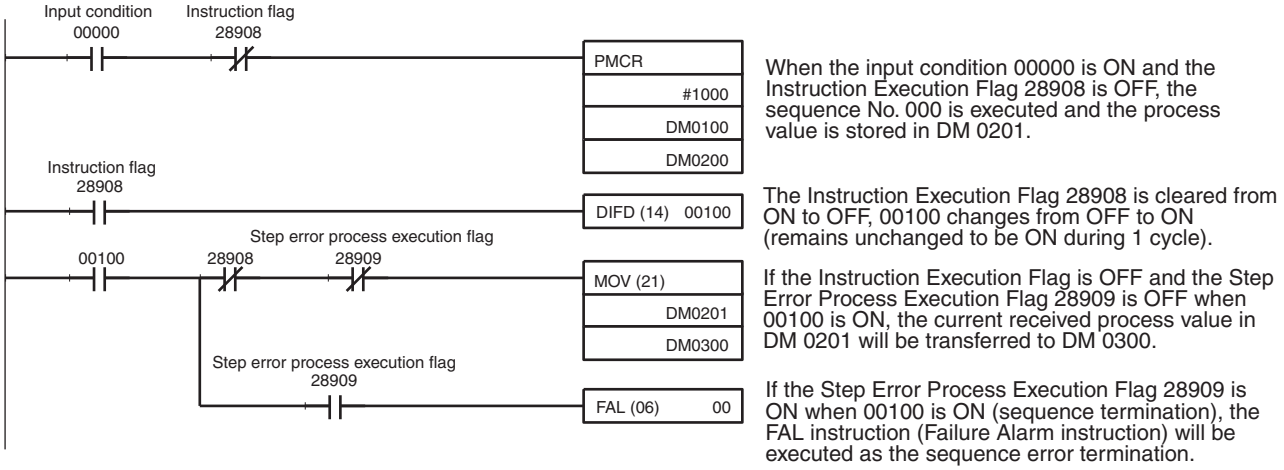

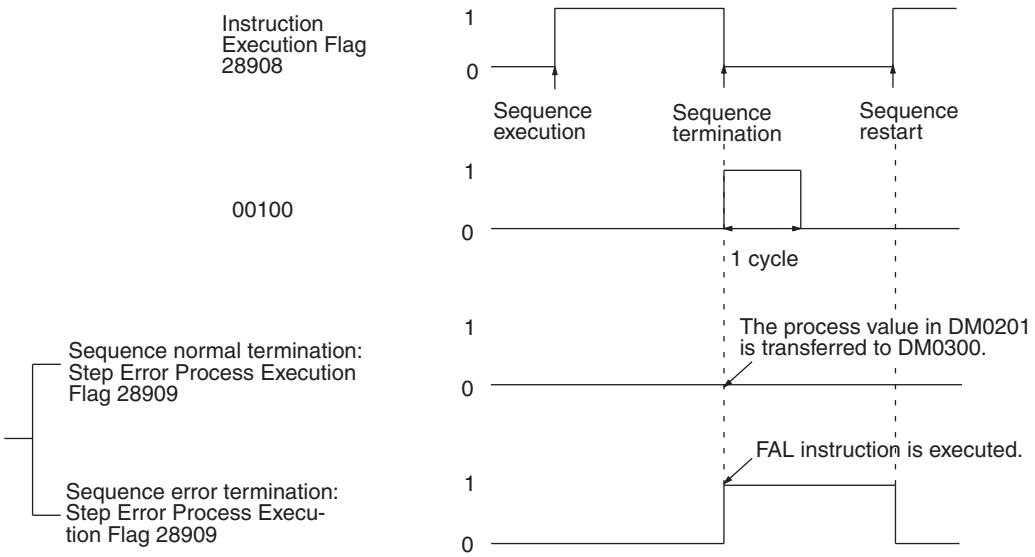

Sequence Error Termination Process

If the End is set for the normal sequence termination and the Abort is set for the error termination as follows, either the normal sequence termination or the error termination can be identified by the Sequence End Termination Flag and the Sequence Abort Termination Flag.

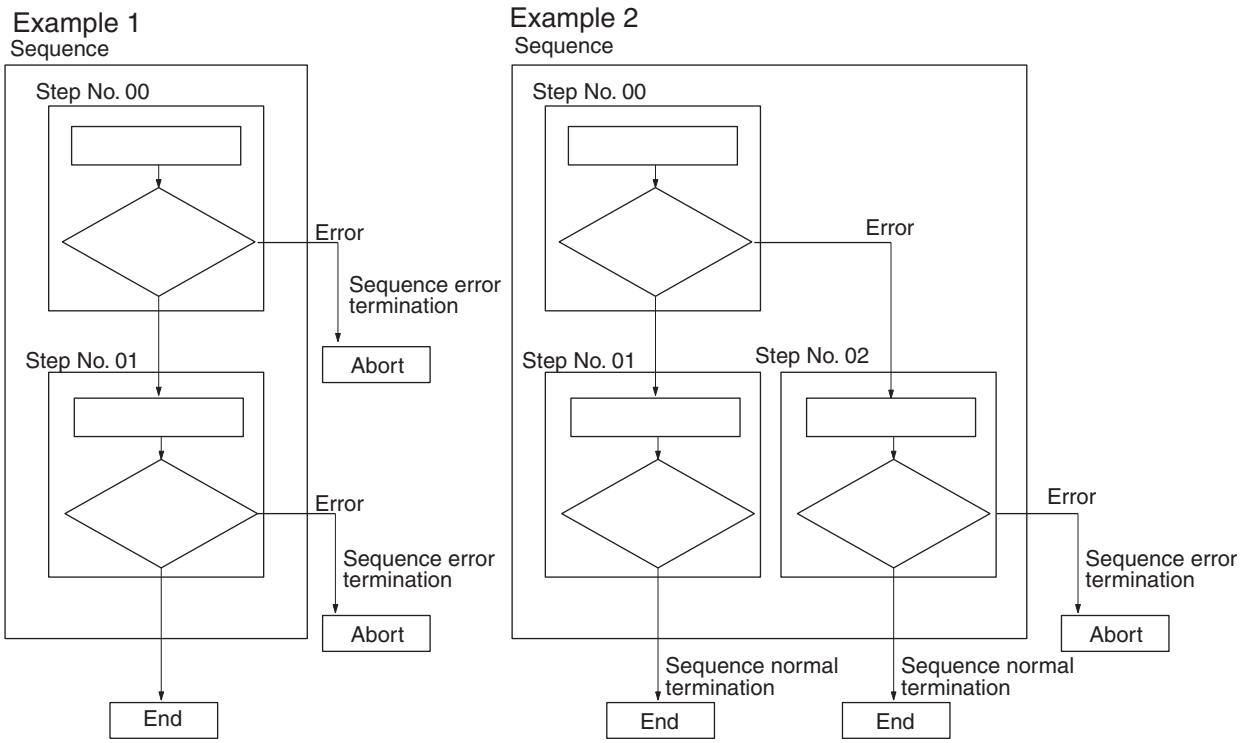
Example 1
Sequence
Step No. 00
Error
Sequence error termination
Abort
Step No. 01
Error
Sequence error termination
Abort
End
Example 2
Sequence
Step No. 00
Error
Step No. 01
Step No. 02
Error
Sequence error termination
Abort
Sequence normal termination
Sequence normal termination
End
End

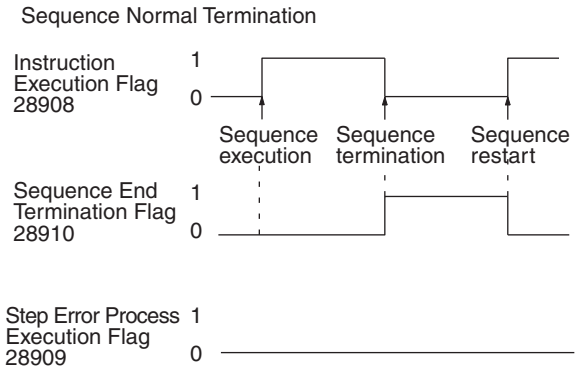
Sequence Normal Termination
Instruction Execution Flag 28908
1
0
Sequence execution
Sequence termination
Sequence restart
Sequence End Termination Flag 28910
1
0
Step Error Process Execution Flag 28909
1
0

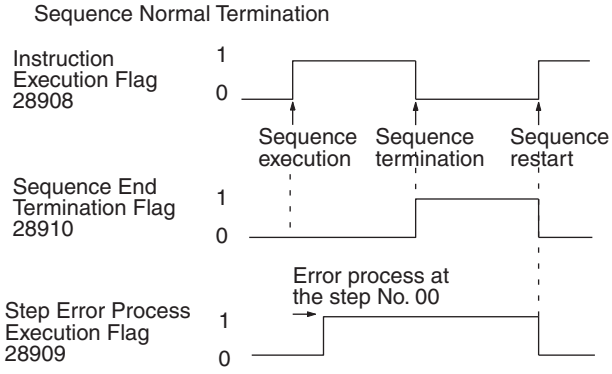
Sequence Normal Termination
Instruction Execution Flag 28908
1
0
Sequence execution
Sequence termination
Sequence restart
Sequence End Termination Flag 28910
1
0
Error process at the step No. 00
Step Error Process Execution Flag 28909
1
0

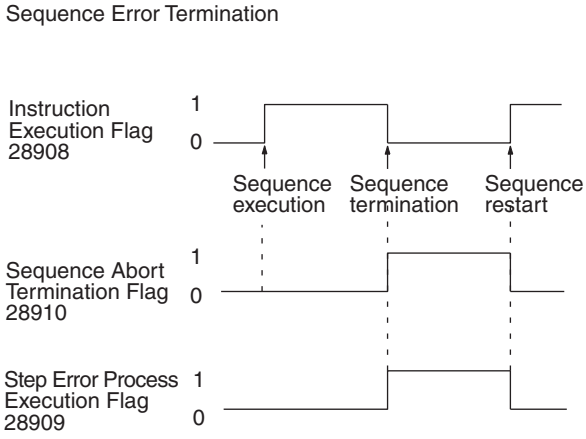
Sequence Error Termination
Instruction Execution Flag 28908
1
0
Sequence execution
Sequence termination
Sequence restart
Sequence Abort Termination Flag 28910
1
0
Step Error Process Execution Flag 28909
1
0

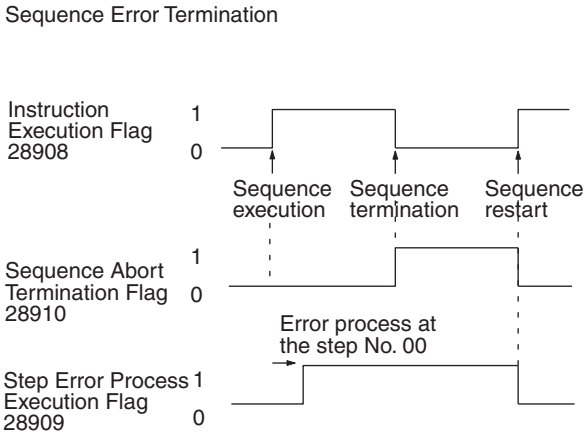
Sequence Error Termination
Instruction Execution Flag 28908
1
0
Sequence execution
Sequence termination
Sequence restart
Sequence Abort Termination Flag 28910
1
0
Error process at the step No. 00
Step Error Process Execution Flag 28909
1
0

Note

1. The Step Error Process Flag is not a flag for the whole sequence, but a flag to determine whether the error process is executed at a step in the sequence. Therefore, as in the previous example 2, if the consecutive step terminates normally after the error process execution during the sequence (Step No. 00), the Flag will remain unchanged at 1 (ON). Thus, it should be kept in mine that this Flag is not always useful as the Error Termination Flag for the whole system.
2. Use the Forced Abort Flag while keeping the following points in mind:
   The Instruction Execution Flag will change from ON to OFF when the user program changes the Forced Abort Flag from OFF to ON. Therefore, the abort process will not be executed if the Forced Abort Flag in turned OFF when the Instruction Execution Flag turns OFF. Set the Forced Abort Flag to OFF after the minimum period [CPU Unit cycle time + 15 ms] of the ON held. When the Instruction Execution Flag B-bit is the PMCR instruction execution condition, the PMCR instruction will be executed during the forced abort process and cause the FAL9C error. Therefore, execute the PMCR instruction after the minimum period [CPU Unit cycle time + 15 ms] after the Forced Abort Flag is changed from OFF to ON.

Example The Forced Abort Flag is turned ON, the 30 ms period is elapses, the Forced Abort Flag is turned OFF, and simultaneously the PMCR instruction interlock is released.

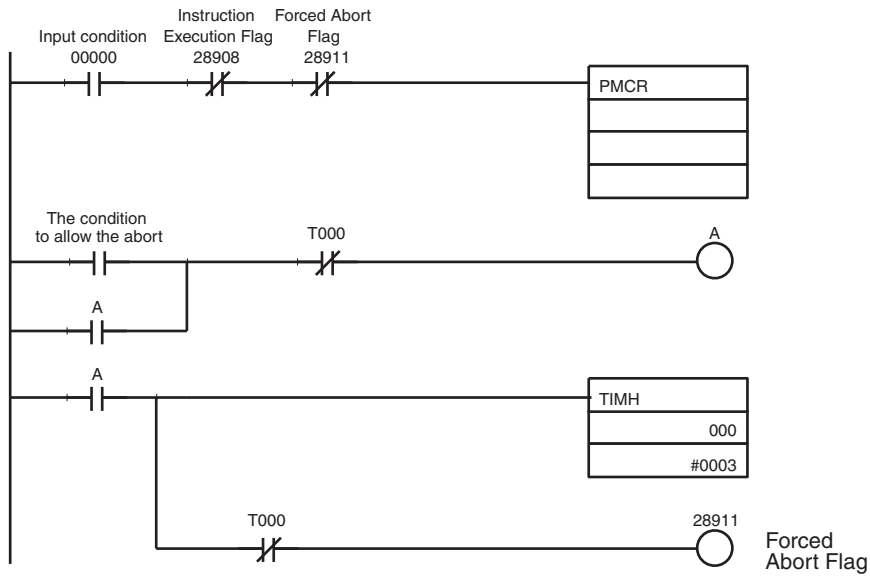

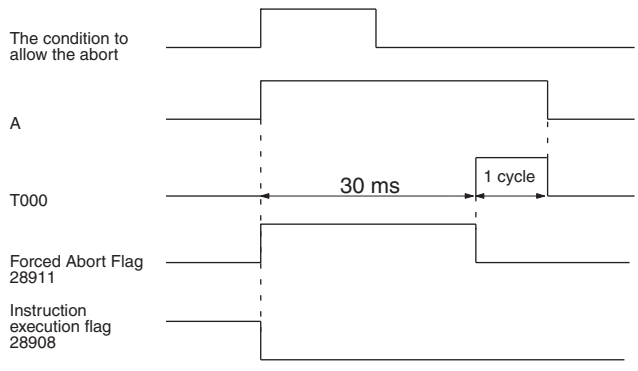

4-5 Calculation Method of Monitoring Time

The calculation method of monitoring time for the operand addressing (without response writing) is shown here. Referring to this calculation method, calculate the monitor times for the operand addressing (with response writing), link word addressing, and direct addressing. When actually setting the monitor times as sequence data, be sure to provide sufficient allowance.

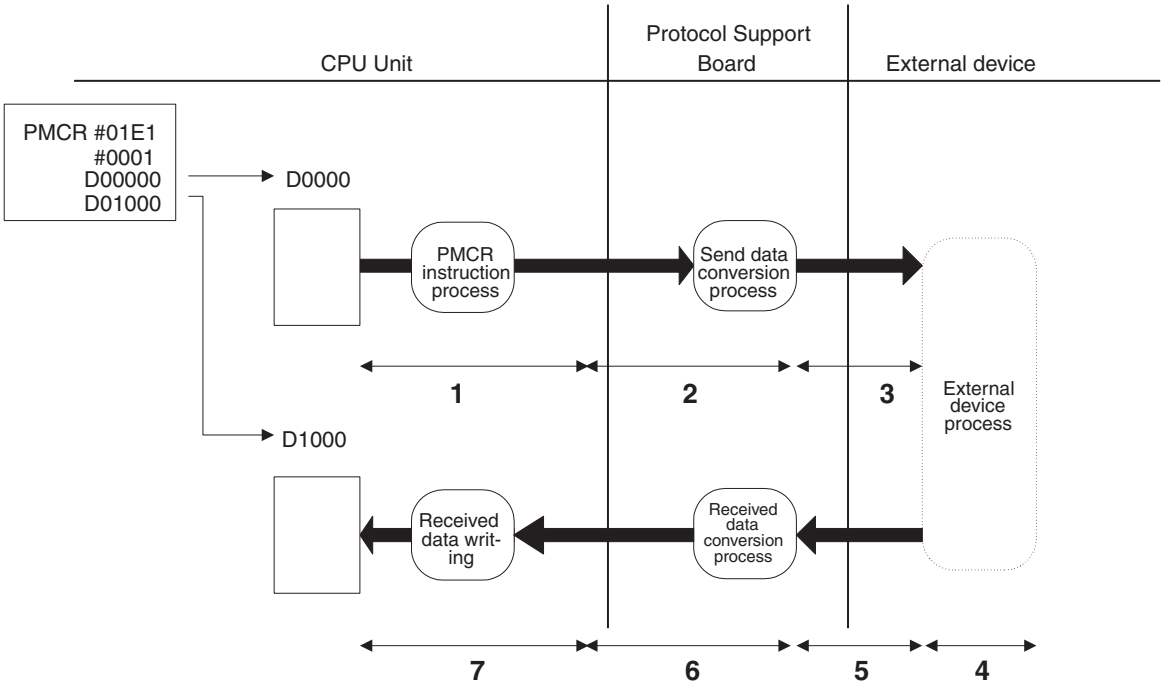

Number	Function	Time Required	Description
1	PMCR instruction's process time	Depends on the Unit/Board being used.	Internal process time from the start of PMCR instruction to the end of the send data transfer
2	Send data conversion process time	Depends on number of conversion bytes	Time from the end of the send data conversion based on the specified conversion method to the start of the send data to the external device.
3	Send data transmission time	Number of data characters x number bits in one character/ transmission rate	Time required to the send data transmission to the external device. When designing, use double the calculated time because idle time exists between the send characters.
4	External device process time	Depends on the external devices' process	Time required by the external device to process according to the command from the PLC until the start of the send response data.
5	Received data transmission time	Number of data characters x one character bit/ transmission rate	Time required to transmit the received data from the external device. When designing, use two to five times the calculated time because idle time exists between the receive characters.

Number	Function	Time Required	Description
6	Received data conversion process time	Depends on number of conversion bytes	Time required for the conversion of the received data from the external device based on the specified conversion method
7	Received data writing time	One cycle time maximum	Time required to finish the received data transfer to the I/O memory.

Note Although the data conversion process times of 2 and 6 vary according to the PLC operation status, for the CS/CJ, the maximum values can be estimated with the following calculation formula:
2: The send data conversion process time = 10 ms + one-byte conversion time x number of conversion bytes
Reverse conversion: 5 μs, ASCII reverse conversion: 4 μs, hexadecimal reverse conversion: 7 μs
(One-byte conversion time → No conversion: 1 μs, reverse conversion: 5 μs, ASCII conversion: 10 μs, ASCII reverse conversion: 4 μs, hexadecimal conversion: 7 μs, hexadecimal reverse conversion: 7 μs)
6: The receive data conversion process time = 2 ms + one-byte conversion time x number of conversion bytes
(One-byte conversion time → No conversion: 1 μs, reverse conversion: 4 μs ASCII conversion: 8 μs, ASCII reverse conversion: 9 μs, hexadecimal conversion: 17 μs, hexadecimal reverse conversion: 17 μs)

- Calculation Example of the Send Finish Monitoring Time, (Tfs)

The send finish monitoring time (Tfs) is set so as to perform monitoring from the time the leading byte (start character) is sent to the time the last data byte (end character) is sent. Therefore, in consideration of number 3 (send data transmission time: number of data characters x number bits in one character/ transmission rate) in the table, the send finish monitoring time is Tfs > Number of data characters x number of bits in one character x 2/transmission rate.

Example @ + 5 + hexadecimal data of 5 words + CRC-CCITT (BIN) 2 bytes + CR = 15 characters (120 bits)

1 + 1 + 10 + 2 + 1 = 15

One character equals 12 bits under the following condition:

Start bit: 1 bit; Data: 8 bits; Parity: Yes; Stop Bit: 2 bits

Therefore, 15 x 2 = 180 bits

180/9,600 = 0.01875 seconds

In practice, however, it must be set to a value double the calculated time because an idle time exists between characters sent from the PMSU as shown below:

0.01875 x 2 = 0.0375 seconds

Since the unit of the monitoring time is in the range of from 0.01 seconds (10 ms) to 99 minutes, users can set the Tfs to 0.04 seconds after which the system executes the error process or the retry process.

- Example to Set Up the Receive Wait Monitoring Time (Tr)

The receive wait monitoring time (Tr) sets the monitoring time from the system's recognition of the received command in the applicable step and to the receiving of the beginning one-byte (the start character). In the above table, it refers to a total of 4+5 for the beginning character and it can be set in the range where the following equation is satisfied:

The receive wait monitor time, Tr > 4+5 for the beginning character

When this time is up, the system executes the error process or the retry process.

- The Receive Finish Monitoring Time (Tfr)

The receive finish monitoring time (Tfr), monitors the receiving time from the receipt of the beginning one-byte (the start character) to the receipt of the last one-byte data (the end character). In the above table, it refers to 5. As in the case of the send finish monitor time, an idle time exists between receive characters and depending on devices to be connected, the time varies. Therefore, it is recommended that the time be set to two to five times of the calculated time. It can be set in the following range:

The receive finish monitor time, Tfr > 5 x (2 to 5)

When this time is expired, the system executes the error process or the retry process.

4-6 Operation Confirmation

"Tracing the Transmission Line" and "I/O Memory Monitor of the PLC" functions are available with the Protocol Support Tool to confirm the operation of the created protocol macro.

- **Tracing the Transmission Line**
  Trace the transmission data and the control signals flowing on the transmission line (RS-232C or RS-422A/485). With this function, users can confirm the data and signals flowing on the transmission line, even if they do not have the protocol analyzer.

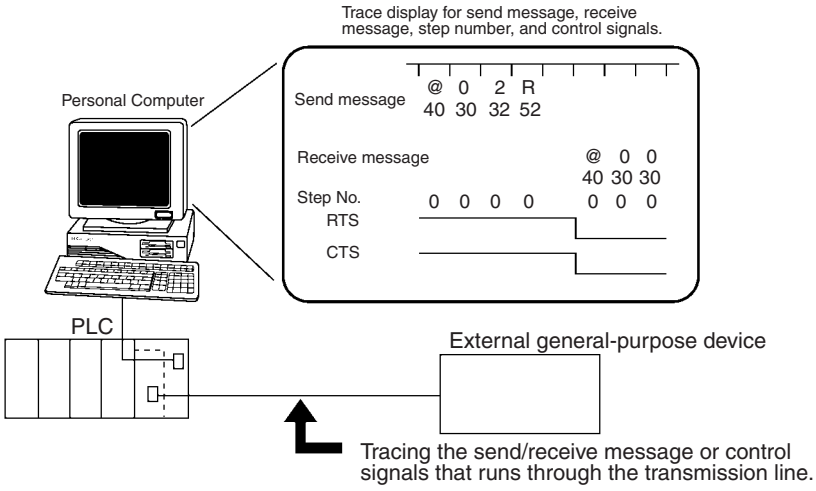

- **I/O Memory Monitor of the PLC**
  Monitor or edit the I/O memory areas on the PLC. With this function, users can set or edit the send data or receive data designated in the 3rd and 4th operands of the PMCR instruction (2nd and 3rd operands for the C200HX/HG/HE), monitor the receive data, and monitor the contents of data in the auxiliary area.

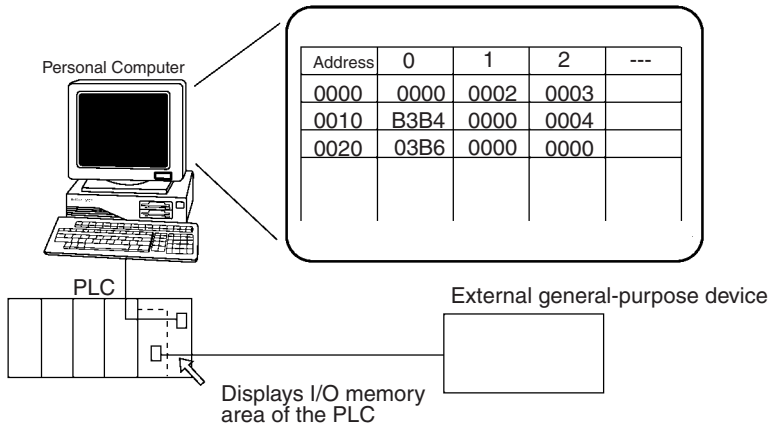

When an error occurs while the ladder program is executed, users can search for the cause of the error by checking various flags. Refer to *3-10 Auxiliary Area and Allocated Data Areas*.

4-7 Errors at the Protocol Execution

When an error listed below occurs, take the appropriate action by referring to the following table. Refer to the *CS/CJ Series Serial Communications Board/ Serial Communications Unit Operation Manual (W336)* and *C200HX/HG/HE Communication Boards Operation Manual (W304).*

4-7-1 CS/CJ

Note For the Serial Communications Board:
m = DM32000 (words)
n = 1900 (words)
For the Serial Communications Unit:
m = DM30000 + 100 × unit number (words)
n = 1500 + 25 × unit number (words)

Problem			Allocated data area	Cause	Action
Serial communications mode setting	**Indicator display**	**Status information**			
Serial communications mode is not set to protocol macro.	---	---	Bits 12 to 15 (serial communications mode) of allocated data area (n+5/n+15) are not 6 hexadecimal.	Serial communications mode setting is wrong.	Set bits 11 to 08 (serial communications mode) of m/m+10 in the allocated DM are to 6 hexadecimal (protocol macro).
Serial communications mode is set to protocol macro.	SD□/RD□, COM□ indicators are not lit. (Electrically not connected)	Although PMCR instruction is executed, bit 15 (Protocol Macro Execution Flag) in the allocated data area (n+9/n+19) does not turn ON.	Bits 00 to 07 of the Communications Port Execution Error Flag (A219 words) are set to 1 (ON).	Either operand settings of the PMCR instruction are wrong or execution timing is not correct.	See table on page 180.
			As a PMCR instruction execution condition, bit 15 (Protocol Macro Execution Flag) in the allocated data area (n+9/n+19) is set to normally open.	Programming error	As a PMCR instruction execution condition, set bit 15 (Protocol Macro Execution Flag) to normally closed.
			ER Flag (one of the condition flags) is ON.	C1 data range of PMCR instruction is illegal; number of words in S or D data exceeds 250; or Communications Port Enabled Flag is OFF.	Check if C1, S, and D operands of PMCR instruction are properly set.
			AER Flag (one of the condition flags) is ON.	Access prohibit area is designated in S or D of PMCR instruction.	Check if S and D operands of PMCR instruction are properly set.

Problem			Allocated data area	Cause	Action
Serial communications mode setting	**Indicator display**	**Status information**			
Serial communications mode is set to protocol macro.	SD□/RD□, COM□ indicators are not lit. (Electrically not connected)	Although PMCR instruction is executed, bit 15 (Protocol Macro Execution Flag) in the allocated data area (n+9/n+19) does not turn ON.	Bits 00 to 03 (error codes) in the allocated data area (n+9/n+19) are set to 2 hexadecimal (sequence number error).	Sequence number designated in C2 of PMCR instruction is set to a value other than 000 to 3E7 hexadecimal (000 to 999 decimal). Communications sequence number that does not exist in the protocol data is designated.	Set C2 of PMCR instruction to 0000 to 03E7 hexadecimal (000 to 999 decimal) Check if communications sequence number is correct.
			Bits 00 to 03 (error codes) in the allocated data area (n+9/n+19) are set to 3 hexadecimal (data read/write range over error).	When storing or reading data from I/O area of CPU Unit, designated area range is exceeded.	Designate another area or reduce the send/receive data size.
			Bits 00 to 03 (error codes) in the allocated data area (n+9/n+19) are set to 4 hexadecimal (protocol data syntax error).	Protocol data in the PMSU is faulty.	Using the CX-Protocol, rewrite the protocol data.
			Communications Port Enabled Flags (A20200 to A20207) are OFF (unable to execute)	SEND, RECV, CMND or other PMCR instruction is being executed using the same communications port number	Use another communications port not used for SEND, RECV, CMND, or other PMCR instruction being executed (by changing the setting of C1 bits 12 to 15) or wait until the port becomes available.
			As a PMCR instruction execution condition, the Communications Port Enabled Flag (A20200 to A20207) is set to normally closed.	Programming error	As a PMCR instruction execution condition, set the Communications Port Enabled Flag to normally open.
			Bit 00 (port operation) in the allocated data area (n+6/n+16) is set to 0 (port stop)	Either protocol data is being transferred or SUM value error has occurred.	Wait until the protocol data transfer is completed or transfer the protocol data using the CX-Protocol.

Problem			Allocated data area	Cause	Action
Serial communications mode setting	**Indicator display**	**Status information**			
Serial communications mode is set to protocol macro.	SD□/RD□, COM□ indicators are not lit. (Electrically not connected)	Bit 15 (Protocol Macro Execution Flag) in the allocated data area (n+9/n+19) turns ON when PMCR instruction is executed. However, data cannot be properly sent or received.	Send processing is not executed.	Send wait time set for each step of the communications sequence is extremely long.	Using the CX-Protocol, check if the send wait time is properly set.
			Bit 10 (destination busy receiving) in the allocated data area (n+7/n+17) is ON (destination busy).	RTS/CTS flow control of transmission control parameter is set to Yes and the CTS signal from the destination does not turn ON.	Clear the busy state of the destination so that the local CTS signal turns ON.
			Bit 09 (Sequence Wait Flag) in the allocated data are (n+9/n+19) is ON (sequence wait).	Wait command cannot be cleared.	Review the program so that bits 00 and 08 (wait clear switch) in the allocated data area (n words) turn from OFF to ON.
		Bit 15 (Protocol Macro Execution Flag) in the allocated data area (n+9/n+19) turns ON momentarily or does not turn ON at all.	Bits 03 and 11 (forced abort switch) in the allocated data (n) are set to the forced setting.	The forced abort switch is set to the forced setting.	Clear the forced abort switch setting.
	SD□/RD□, COM□ indicators are lit. However, communications cannot be performed.	Bit 10 (Sequence Abort Termination Flag) in the protocol allocated data area (n+9/n+19) is ON.	Sequence was subjected to abort termination.	Protocol macro data is not properly set. System settings such as baud rate or frame format are different from those of the destination.	Using the transmission line trace function of the CX-Protocol, check if protocol data or system settings are correct.
		Bit 15 (Protocol Macro Execution Flag) in the allocated data area (n+9/n+19) remains ON when PMCR instruction is executed without setting the monitor time for each sequence.	Sequence is being executed and cannot be terminated (data receiving state).	Protocol macro data is not properly set. System settings such as baud rate or frame format are different from those of the destination device.	Using the transmission line trace function of the CX-Protocol, check if protocol data or system settings are correct.
		Send data is being sent, but no response is received from the destination device.	Allocated data area (n+5/n+15) (system settings with port settings) are different from those of the destination device.	Bits do not match due to baud rate exceeding the permissible range, mismatching stop bits, etc.	Review the system settings. Review the settings and program of the destination device (baud rate, frame format, etc.).

Problem			Allocated data area	Cause	Action
Serial communications mode setting	**Indicator display**	**Status information**			
Serial communications mode is set to protocol macro.	SD□/RD□, COM□ indicators are lit. However, communications cannot be performed.	Send data is being sent, but no response is received from the destination device.	Bit 15 (transmission error) in the allocated data area (n+8/n+18) turns ON. One of bits 0 to 14 (errors) turns ON.	Cable connection is faulty. Setting of the 2-wire/4-wire selection switch on the port 2 of RS-422A/485 does not match with the wiring. Adapter (NT-AL001, etc.) wiring is faulty.	Check the cable connection. Turn ON the terminating resistance (terminating resistance ON/OFF switch) on the Board side and on the final destination device and turn OFF the terminating resistances of other destination devices.
	SD□/RD□, COM□ indicators are not lit.		---	Hardware is faulty.	Set bits 11 to 08 (serial communications mode) in the allocated DM are (m/m+10) to F hexadecimal (cyclic test serial communications mode), connect the cyclically wired connectors, and execute the cyclic test (turn ON port 1: bit 06 and port 2: bit 14 of the n word). Test status is reflected on n+9/n+19. If the test results show an error, replace the PMSU.
	SD□/RD□, COM□ indicators are lit. However, communications cannot be performed and communications errors occur from time to time.	Transmission error occurs.	Bit 15 (transmission error) in the allocated data area (n+8/n+18) turns ON. One of bits 0 to 14 (errors) turns ON.	System settings such as baud rate or frame format are different from those of the destination device. Bits do not match due to baud rate exceeding the permissible range, mismatching stop bits, etc.	Review the system settings. Review the settings and program of the destination device (baud rate, frame format, etc.).
			Allocated data area (n+5/n+15) (system settings with port settings) are different from those of the destination device.		

Problem			Allocated data area	Cause	Action
Serial communications mode setting	**Indicator display**	**Status information**			
Serial communications mode is set to protocol macro.	SD□/RD□, COM□ indicators are lit. However, communications cannot be performed and communications errors occur from time to time.	Data is received according to the transmission line trace of the CX-Protocol. However, the protocol macro does not recognize data reception.	---	Received data is discarded during the time lag between the data transmission completion and the Send processing completion because the response from the destination device was received too early under the half-duplex setting.	Change to the full-duplex setting.
		Responses from the destination device are occasionally not received. However, response is received when retry processing is conducted.	---	Data sending timing is too early for the destination device to receive data.	Set or extend the send wait time (time until send data is actually sent out) set for each step.
		Transmission error occurs occasionally.	Bit 15 (transmission error) in the allocated data area (n+8/n+18) turns ON. One of bits 0 to 14 (errors) turns ON.	Cable connection is faulty. Terminating resistance on RS-422A/485 port is not set properly. Adapter (NT-AL001, etc.) wiring is faulty or its terminating resistance setting is wrong.	Check the cable connection. Turn ON the terminating resistance (terminating resistance ON/OFF switch) on the Board side and on the final destination device and turn OFF the terminating resistances of other destination devices.
				Communications error frequently occurs due to noise.	Change the cable to twisted-pair shielded cables. Separate the cables from power lines. Check the possible environmental noise.
	Both RDY and ERC (ERR/ALM) flash.	---	Bit 00 (protocol data error) in the allocated data area (n+1) is ON.	Error in the protocol macro data SUM value.	Using the CX-Protocol, transfer correct protocol data.
Serial communications mode is set to protocol macro.	RDY is lit and ERC (ERR/ALM) flashes.	---	Bits 00 to 03 (port operation error code) in the allocated data area (n+9/n+19) are not set to 0 hexadecimal.	Protocol macro detected an error to stop operation.	Refer to page 181.

Note To enable changes in the system settings, reset the power supply and restart the PMSU, restart the ports, or execute the STUP instruction.

Countermeasures for Errors Displayed as Network Communications Termination Codes (A203 to A210)

Network communications termination code		Description	Action
Bits 08 to 15	Bits 00 to 07		
02 hexadecimal	02 hexadecimal	PMSU that correspond to the unit number address does not exist.	Check if the PMCR instruction (C1: communications port number) designates another PMSU or serial port (physical port).
04 hexadecimal	01 hexadecimal	Designated service is not supported.	Check if the PMCR instruction (C1: communications port number) designates another PMSU or serial port (physical port). Check if the serial communications mode of the serial port designated in C1 is set to protocol macro. (Set the serial communications mode to protocol macro.)
02 hexadecimal	05 hexadecimal	Response has not been returned from the destination device and the monitor time has timed out.	Check if the serial communications mode of the serial port designated in C1 is set to protocol macro. (Set the serial communications mode to protocol macro.)
11 hexadecimal	06 hexadecimal	No corresponding communications sequence number	A number not registered in the PMCR instruction (C2: communications sequence number) has been designated. Using the CX-Protocol, register the communications sequence.
22 hexadecimal	01 hexadecimal	Impossible to execute because protocol macro is being executed.	An attempt is made to execute the PMCR instruction while protocol macro is being executed. Change the bit 15 (Protocol Macro Execution Flag) in the allocated data area (n+9/n+19) to normally closed and modify the ladder program to execute the PMCR instruction.
24 hexadecimal	01 hexadecimal	There is no registered table.	One of the following; • Protocol macro (communications sequence) data has not been registered. • Protocol macro (communications sequence) data is being registered (transferred). • Protocol macro (communications sequence) data has SUM value error. Using the CX-Protocol, transfer correct protocol macro (communications sequence) data.

Countermeasures for Bits 00 to 03 of Protocol Macro Error Codes (n+9/n+19)

Error code	Indicator	Description	Cause	Action
0 hexadecimal		Normal	---	---
1 hexadecimal		Reserved for the system	---	---
2 hexadecimal	No indication	Sequence number error	A number not registered in the PMCR instruction (C2: communications sequence number) has been designated.	• Correct the communications sequence number. • Using the CX-Protocol, register the designated sequence number.
3 hexadecimal	ERC flashes and ERR/ALM flashes.	Data read/write range over error	When storing or reading data from the CPU Unit, designated area range is exceeded.	In case of operand addressing: Check the contents designated in S and D operands of PMCR instruction. In case of link word/direct addressing: Using the CX-Protocol, check the designated range.

Error code	Indicator	Description	Cause	Action
4 hexadecimal	ERC flashes and ERR/ALM flashes.	Protocol data syntax error	Some codes could not be executed during protocol execution.	Check and correct the following items: • Total of the areas (O1, O2, I1, and I2) designated by the link word exceeded 500 words. • The same area designated by the link word was used for ports 1 and 2. • Writing was designated for the parameter designation. • EM area read/write was designated for the interrupt notification. (Only for the Serial Communications Board) • Interrupt notification was designated for the Unit. (Only for the Serial Communications Unit) • More than 30 write attributes were set for one message. • Send/receive message length was set to 0 bytes. • Send/receive message length exceeded the maximum send/receive bytes. • Message was not registered for the matrix reception. • Both the RTS/CTS flow control and Xon/Xoff control were designated as transmission control.

4-7-2 C200HX/HG/HE

Problem			Cause	Action
PMSU does not operate.	The RDY indicator turns OFF.		PMSU is abnormal	Replace the PMSU and reconnect the power.
System error FAL9C occurred.	26800 is ON		PMSU is abnormal.	Replace the PMSU and reconnect the power.
	26801 is ON and the RDY indicator turns OFF.		This error occurs when the RS-232C port is not recognized when the power is turned ON due to abnormal hardware.	Replace the PMSU and reconnect the power.
	26802 is ON		PMSU protocol data is abnormal.	Rewrite the protocol data by using the Protocol Support Tool.
System errors FAL9C and FAL9B occurred	26815 is ON and the RDY indicator flashes.		• The PMSU system setting (DM 6550 to DM 6559) has incorrect setting values. If 26813 is ON, the port B has a problem. • The PMSU does not support the protocol macro function.	• Check the PMSU system setting contents of the problem port and restart the system. • Use a PMSU which supports the protocol macro function.
System error FAL9C occurred when the PMCR instruction is executed.	26811 is ON (Port B) or 26812 is ON (Port A).		The protocol macro error (PMCR instruction relating error) occurred. The details are registered as error codes.	Take necessary actions in accordance with the error codes.
Instruction Execution Flag is not set to ON. 28908 is Port A. 28912 is Port B.	Error codes 28608 to 11 (Port A) 28612 to 15 (Port B)	Error code: 1	• The PMSU system (DM 6550 to DM 6559) is not set to the protocol macro mode. • The PMSU does not support the protocol macro function.	• Check the PMSU system setting contents of the problem port. • Use the PMSU which supports the protocol macro function.
		Error code: 2	The sequence number is not present.	Reset the first operand of the PMCR instruction. Otherwise, transfer the sequence number to the PMSU.
		Error code: 3	The received data overflowed when writing it in the I/O memory.	Specify another area. Otherwise, reduce the receive data size.
		Error code: 4	The PMSU data error.	Rewrite the protocol data by using the Protocol Support Tool.

Problem		Cause	Action
The data send/receive is not well executed despite the PMCR instruction execution. The Instruction Execution Flag is ON. 28908 is Port A. 28912 is Port B	28909 is ON (Port A) or 28913 is ON (Port B).	The step is executed the error process during the sequence because the receive message does not match with the expected receive message.	Search the error cause and add the appropriate process.
	28304 is ON (Port A) or 28312 is ON (Port B).	The communications error occurred during the message receive.	Confirm the communications route to the connected devices.
Communications with the connected devices is impossible.	28304 is ON (Port A) or 28312 is ON (Port B).	This error occurred due to an abnormal communications route to the connected devices or by a communications condition setting failure. The details are registered as error codes. 28300 to 03 (Port A) 28608 to 11 (Port B)	• Restart the problem port or initialize each relay by executing the RXD and PMCR instructions. • Confirm the communications route. • Check the communications condition setting.
PMCR instructions are not executed.	ER Flag (25503) is ON.	This error occurs by the instruction operand setting failure.	Check the instruction operand.

4-8 Communications Response Time Performance

The response performance of communications with the external devices using PMCR instruction, which varies according to the definition of the Protocol Macro, is divided in the following four modes:

- Use the event (operand addressing) areas
- Use the interrupt mode for the response type
- Use the link word area
- Use the direct addressing

The previous four modes are different in data transmission mode between the CPU Unit and the Board/Unit. There are three kinds of data transfer modes from the CPU Unit to the Board/Unit, while there are four kinds of data transfer modes from the Board/Unit to the CPU Unit. The communications response time varies according to the combination of those modes.

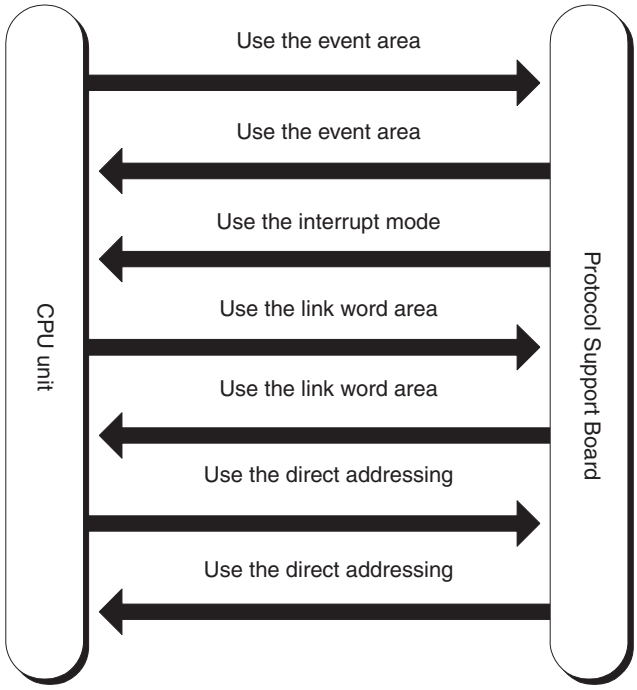

4-8-1 CS/CJ

- Communications Response Time Using the Event (Operand Addressing) Area
  Illustrated below is the data flow when the communications area addressed by the third and the fourth operand of the PMCR instruction is used:

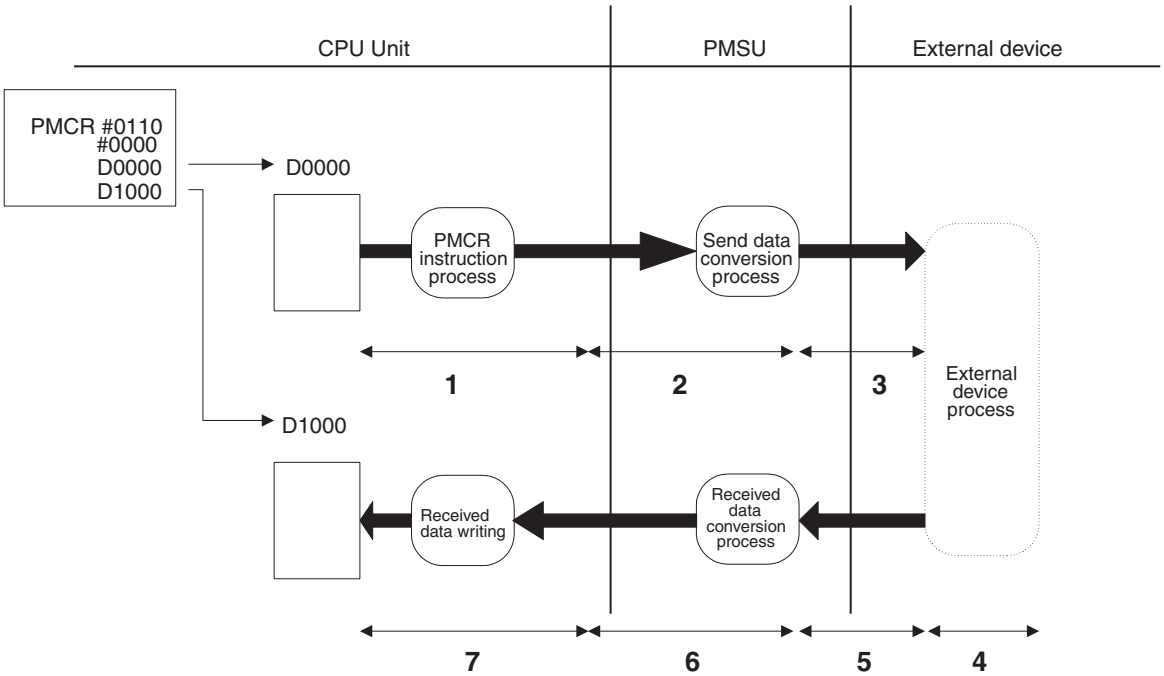

The communications response time is the total time from 1 to 7 in the above figure.

Number	Function	Time Required	Description
1	PMCR instruction process time	15 ms + two-cycle time maximum	The internal process time from the start of PMCR instruction to the end of the data transfer to the Board/Unit.
2	Send data conversion process time	Depends on the number of conversion bytes	The time required for the send data conversion based on the specified conversion mode which finishes at the start of data sending to the external device.
3	Send data transmission time	Number of data characters x one-character bit/ transmission rate	The time required for the send data transmission to the external device. (Use double the calculated time because idle time exists between send characters.)
4	External device process time	Depends on the external device process	The time required for the external device process according to the PLC's command which finishes by the start of the response data sending.
5	Received data transmis-sion time	Number of data characters x one-character bit/ transmission rate	The time required for the received data transmission from the external device. (Use two to five times the calculated time because idle time exists between the receive characters.)
6	Received data conversion process time	Depends on the number of conversion bytes	The time required for the received data conversion from the external device based on the specified conversion mode which finishes at the end of data transfer
7	Received data writing process time	Board: One-cycle time maximum Unit: Two-cycle time maximum	The time required to finish received data transfer to I/O memory.

Note Although the data conversion process times of 2 and 6 vary according to the PLC operation status, the maximum values can roughly be estimated by the following calculation formula:

2: The send data conversion process time = 10 ms + one-byte conversion time x number of conversion bytes

Reverse conversion: 5 μs, ASCII reverse conversion: 4 μs, hexadecimal reverse conversion: 7 μs

(One-byte conversion time → No conversion: 1 μs, reverse conversion: 5 μs, ASCII conversion: 10 μs, ASCII reverse conversion: 4 μs, hexadecimal conversion: 7 μs, hexadecimal reverse conversion: 7 μs)

6: The receive data conversion process time = 2 ms + one-byte conversion time x number of conversion bytes

(One-byte conversion time → No conversion: 1 μs, reverse conversion: 4 μs ASCII conversion: 8 μs, ASCII reverse conversion: 9 μs, hexadecimal conversion: 17 μs, hexadecimal reverse conversion: 17 μs)

- Communications Response Performance Using the Interrupt Notification Mode
  Illustrated below is the data flow when the event area (operand addressing) is used and the response type is the interrupt mode. The interrupt notification mode is only available with the Serial Communications Board.

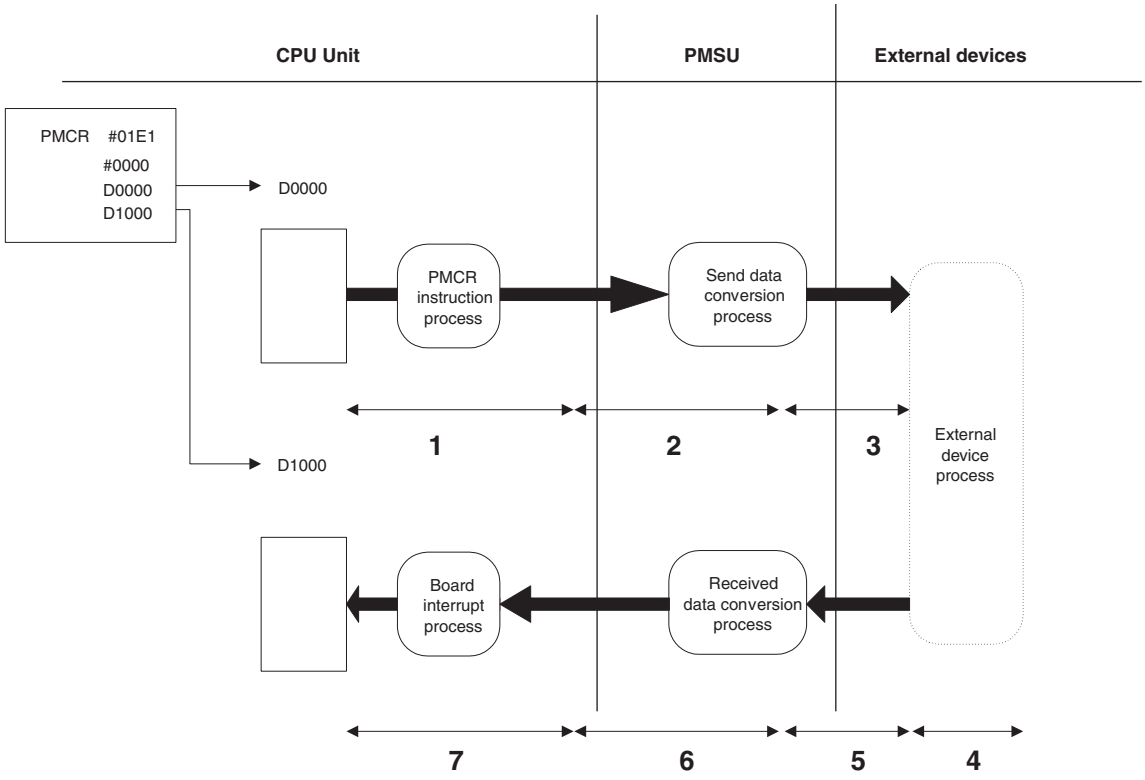

The communications response time is the total time from 1 to 7 in the above figure.

Number	Function	Time Required	Description
1	PMCR instruction process time	15 ms + two-cycle time maximum	The time from the start of PMCR instruction to the end of the data transfer to the Board.
2	Send data conversion process time	Depends on the number of conversion bytes	The time required for the send data conversion based on the specified conversion mode which finishes at the start of data sending to the external device.
3	Send data transmission time	Number of data characters x one-character bit/ transmission rate	The time required for the send data transmission to the external device. (Use double the calculated time because an idle time exists between send characters.)
4	External device process time	Depends on the external device process	The time required for the external device process according to the PLC's command which finishes by the start of the response data sending.
5	Received data transmission time	Number of data characters x one-character bit/ transmission rate	The time required for the received data transmission from the external device. (Use two to five times the calculated time because idle time exists between the receive characters.)
6	Received data conversion process time	Depends on the number of conversion bytes	The time required for the received data conversion from the external device based on the specified conversion mode which finishes at the end of data transfer.
7	Board interrupt process time	About 50 μs (+0 to 2 ms) (see note)	The time from the response interrupt notification to the end of the received data transfer to I/O memory.

Note

1. When interrupt notifications are issued consecutively, a time lag of 2 ms will occur between notifications. A time lag of 2 ms is provided between interrupt notifications issued consecutively through the ports 1 and 2.
2. Although the data conversion process times of 2 and 6 vary according to the PLC operation status, the maximum values can roughly be estimated by the following calculation formula:
   2: The send data conversion process time = 10 ms + one-byte conversion time x number of conversion bytes
   Reverse conversion: 5 μs, ASCII reverse conversion: 4 μs, hexadecimal reverse conversion: 7 μs
   (One-byte conversion time → No conversion: 1 μs, reverse conversion: 5 μs, ASCII conversion: 10 μs, ASCII reverse conversion: 4 μs, hexadecimal conversion: 7 μs, hexadecimal reverse conversion: 7 μs)
   6: The receive data conversion process time = 2 ms + one-byte conversion time x number of conversion bytes
   (One-byte conversion time → No conversion: 1 μs, reverse conversion: 4 μs ASCII conversion: 8 μs, ASCII reverse conversion: 9 μs, hexadecimal conversion: 17 μs, hexadecimal reverse conversion: 17 μs)

- Communications Response Performance Using the Link Word Area
  Illustrated below is the data flow when the link word area is used for the communications data storing area:

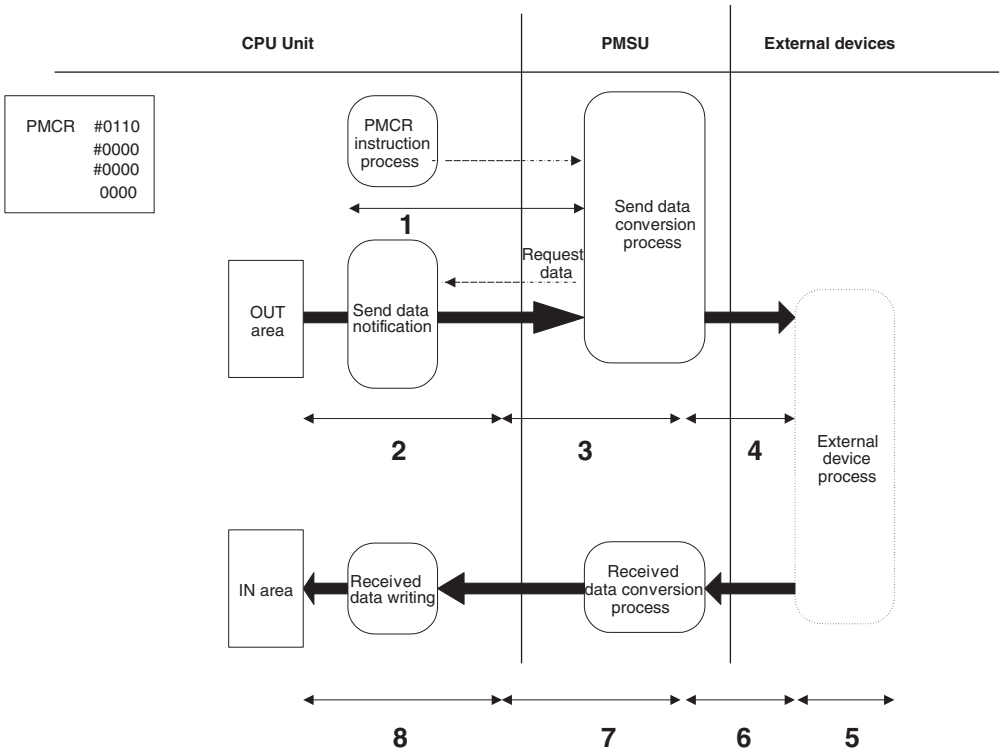

The communications response time is the total time from 1 to 8 in the above figure.

Number	Function	Time Required	Description
1	PMCR instruction executing notification process time	15 ms + two-cycle time maximum	The time from the start of PMCR instruction to the end of the instruction notification to the PMSU.
2	Send data notification process time	Board: One-cycle time maximum Unit: Two-cycle time maximum	The time required for the data transfer based on the PMSU request.
3	Send data conversion process time	Depends on the number of conversion bytes	The time required for the data conversion based on the specified conversion mode which finishes at the start of data sending to the external device.
4	Send data transmission time	Number of data characters x one-character bit/ transmission rate	The time required for the data transmission to the external device. (Use double the calculated time because idle time exists between send characters.)
5	External device process time	Depends on the external device process	The time required for the external device process according to the PLC's command which finishes by the start of the response data sending.
6	Received data transmission time	Number of data characters x one-character bit/ transmission rate	The time required for the receive data transmission from the external device. (Use two to five times the calculated time because idle time exists between the receive characters.)
7	Received data conversion process time	Depends on the number of conversion bytes	The time required for the receive data conversion from the external device based on the specified conversion mode which finishes at the end of data.
8	Received data writing process time	Board: One-cycle time maximum Unit: Two-cycle time maximum	The time required for the received data transfer to I/O memory.

Note Although the data conversion process times of 2 and 6 vary according to the PLC operation status, the maximum values can roughly be estimated by the following calculation formula:

2: The send data conversion process time = 10 ms + one-byte conversion time x number of conversion bytes

Reverse conversion: 5 μs, ASCII reverse conversion: 4 μs, hexadecimal reverse conversion: 7 μs

(One-byte conversion time → No conversion: 1 μs, reverse conversion: 5 μs, ASCII conversion: 10 μs, ASCII reverse conversion: 4 μs, hexadecimal conversion: 7 μs, hexadecimal reverse conversion: 7 μs)

6: The receive data conversion process time = 2 ms + one-byte conversion time x number of conversion bytes

(One-byte conversion time → No conversion: 1 μs, reverse conversion: 4 μs ASCII conversion: 8 μs, ASCII reverse conversion: 9 μs, hexadecimal conversion: 17 μs, hexadecimal reverse conversion: 17 μs)

- Communications Response Time Using the Direct Addressing
  Illustrated below is the data flow when the direct addressing is used:

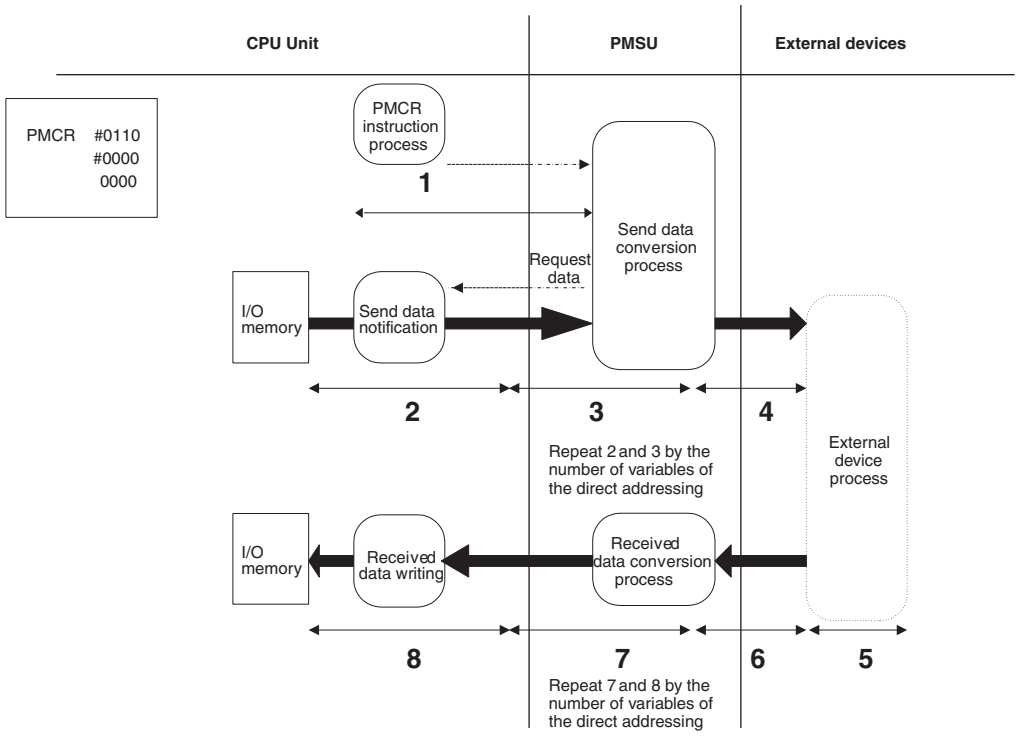

The communications response time is the total time from 1 to 8 in the above figure. The functions 2 and 3 are repeated by the number of variables of the direct addressing of the send message while 7 and 8 are repeated by those of the receive message.

Number	Function	Time Required	Description
1	PMCR instruction executing notification process time	15 ms + two-cycle time maximum	The time from the start of PMCR instruction to the end of the instruction notification to the PMSU.
2	Send data notification process time	Board: One-cycle time maximum Unit: Two-cycle time maximum	The time required for the send data transfer based on the PMSU request.
3	Send data conversion process time	Depends on the number of conversion bytes	The time required for the sent data conversion based on the specified conversion mode which finishes at the start of data sending to the external device.
4	Send data transmission time	Number of data characters x one-character bit/ transmission rate	The time required for the data transmission to the external device. (Use double the calculated time because idle time exists between send characters.)
5	External device process time	Depends on the external device process	The time required for the external device process according to the PLC's command which finishes by the start of the response data sending.
6	Received data transmission time	Number of data characters x one-character bit/ transmission rate	The time required for the received data transmission from the external device. (Use two to five times the calculated time because idle time exists between the receive characters.)
7	Received data conversion process time	Depends on the number of conversion bytes	The time required for the received data conversion from the external device based on the specified conversion mode which finishes at the end of data.
8	Received data writing process time	Board: One-cycle time maximum Unit: Two-cycle time maximum	The time required for the received data transfer to I/O memory.

Note Although the data conversion process times of 2 and 6 vary according to the PLC operation status, the maximum values can roughly be estimated by the following calculation formula:

2: The send data conversion process time = 10 ms + one-byte conversion time x number of conversion bytes

Reverse conversion: 5 μs, ASCII reverse conversion: 4 μs, hexadecimal reverse conversion: 7 μs

(One-byte conversion time → No conversion: 1 μs, reverse conversion: 5 μs, ASCII conversion: 10 μs, ASCII reverse conversion: 4 μs, hexadecimal conversion: 7 μs, hexadecimal reverse conversion: 7 μs)

6: The receive data conversion process time = 2 ms + one-byte conversion time x number of conversion bytes

(One-byte conversion time → No conversion: 1 μs, reverse conversion: 4 μs ASCII conversion: 8 μs, ASCII reverse conversion: 9 μs, hexadecimal conversion: 17 μs, hexadecimal reverse conversion: 17 μs)

- The Overhead at 1:N Connection
  When the link word area or the direct addressing area is used, the send data is transferred from the CPU Unit at every step, therefore time will be required before the actual start of the data sending as follows:
- When the link word area is used: The total time of 2 + 3 in the above figure (the link word)
- When the direct addressing is used: The total time of 2 + 3 in the above figure (the direct addressing)

These times are not required if the event (operand addressing) area is used, because the beginning of sequence only in the send data is transferred from the PLC's CPU Unit.

4-8-2 C200HX/HG/HE

- Communications Response Time Using the Event (Operand Addressing) Area
  Illustrated below is the data flow when the communications area addressed by the second and the third operand of the PMCR instruction is used:

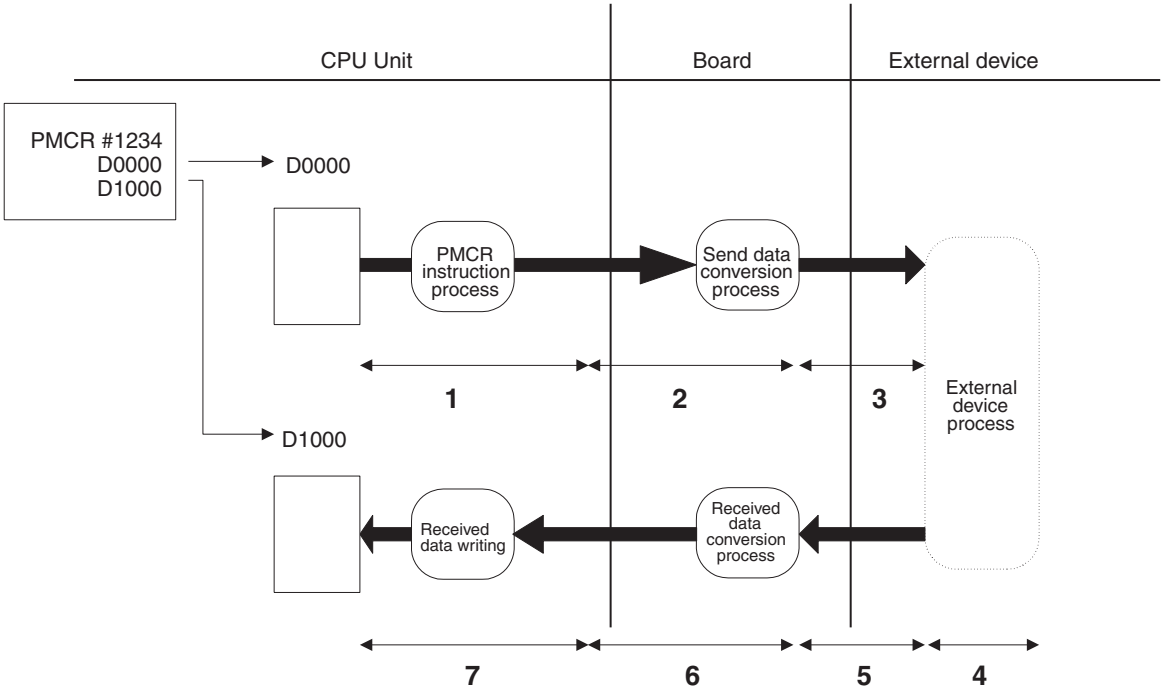

The communications response time is the total time from 1 to 7 in the above figure.

Number	Function	Time Required	Description
1	PMCR instruction process time	About 40 to 70 μs	The time from the start of PMCR instruction to the end of the data transfer
2	Send data conversion process time	Depends on the number of conversion bytes	The time required for the send data conversion based on the specified conversion mode which finishes at the start of data sending to the external device.
3	Send data transmission time	Number of data characters x one-character bit/ transmission rate	The time required for the send data transmission to the external device. (Use double the calculated time because idle time exists between send characters.)
4	External device process time	Depends on the external device process	The time required for the external device process according to the PLC's command which finishes by the start of the response data sending.
5	Received data transmission time	Number of data characters x one-character bit/ transmission rate	The time required for the received data transmission from the external device. (Use two to five times the calculated time because idle time exists between the receive characters.)
6	Received data conversion process time	Depends on the number of conversion bytes	The time required for the received data conversion from the external device based on the specified conversion mode which finishes at the end of data transfer
7	Received data writing process time	One-cycle time maximum	The time required to finish received data transfer to I/O memory.

Note Although the data conversion process times of 2 and 6 vary according to the PLC operation status, the maximum values can roughly be estimated by the following calculation formula:
2: The send data conversion process time = 10,000 μs + one-byte conversion time x number of conversion bytes
(one-byte conversion time → No conversion: 15 μs, ASCII conversion: 40 μs, hexadecimal conversion: 55 μs)
6: The receive data conversion process time = 100 μs + one-byte conversion time x number of conversion bytes (one-byte conversion time→No conversion: 15 μs, ASCII conversion: 30 μs, hexadecimal conversion: 15 μs)

- Communications Response Performance Using the Interrupt Notification Mode
  Illustrated below is the data flow when the event area (operand addressing) is used and the response type is the interrupt mode:

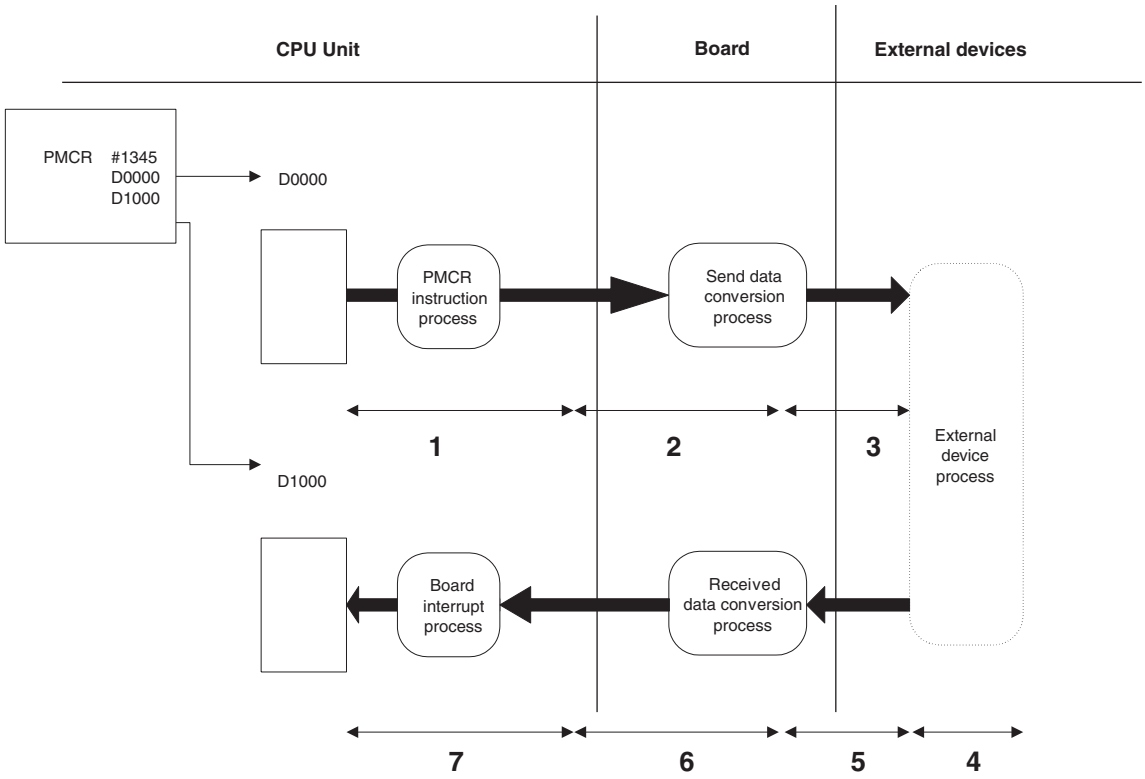

The communications response time is total time from 1 to 7 in the above figure.

Number	Function	Time Required	Description
1	PMCR instruction process time	About 40 to 70 µs	The time from the start of PMCR instruction to the end of the data transfer.
2	Send data conversion process time	Depends on the number of conversion bytes	The time required for the send data conversion based on the specified conversion mode which finishes at the start of data sending to the external device.
3	Send data transmission time	Number of data characters x one-character bit/ transmission rate	The time required for the send data transmission to the external device. (Use double the calculated time because idle time exists between send characters.)
4	External device process time	Depends on the external device process	The time required for the external device process according to the PLC's command which finishes by the start of the response data sending.
5	Received data transmission time	Number of data characters x one-character bit/ transmission rate	The time required for the received data transmission from the external device. (Use two to five times the calculated time because idle time exists between the receive characters.)
6	Received data conversion process time	Depends on the number of conversion bytes	The time required for the received data conversion from the external device based on the specified conversion mode which finishes at the end of data transfer.
7	PMSU interrupt process time	About 50 µs	The time from start of response interrupt notification to the end of the received data transfer to I/O memory.

Note Although the data conversion process times of 2 and 6 vary according to the PLC operation status, the maximum values can roughly be estimated by the following calculation formula:
2: The send data conversion process time = 10,000 µs + one-byte conversion time x number of conversion bytes
(One-byte conversion time→No conversion: 15 µs, ASCII conversion: 40 µs, hexadecimal conversion: 55 µs)
6: The received data conversion process time = 100 µs + one-byte conversion time x number of conversion bytes
(one-byte conversion time→No conversion: 15 µs, ASCII conversion: 30 µs, hexadecimal conversion: 15 µs)

- Communications Response Performance Using the Link Word Area
  Illustrated below is the data flow when the link word area is used for the communications data storing area:

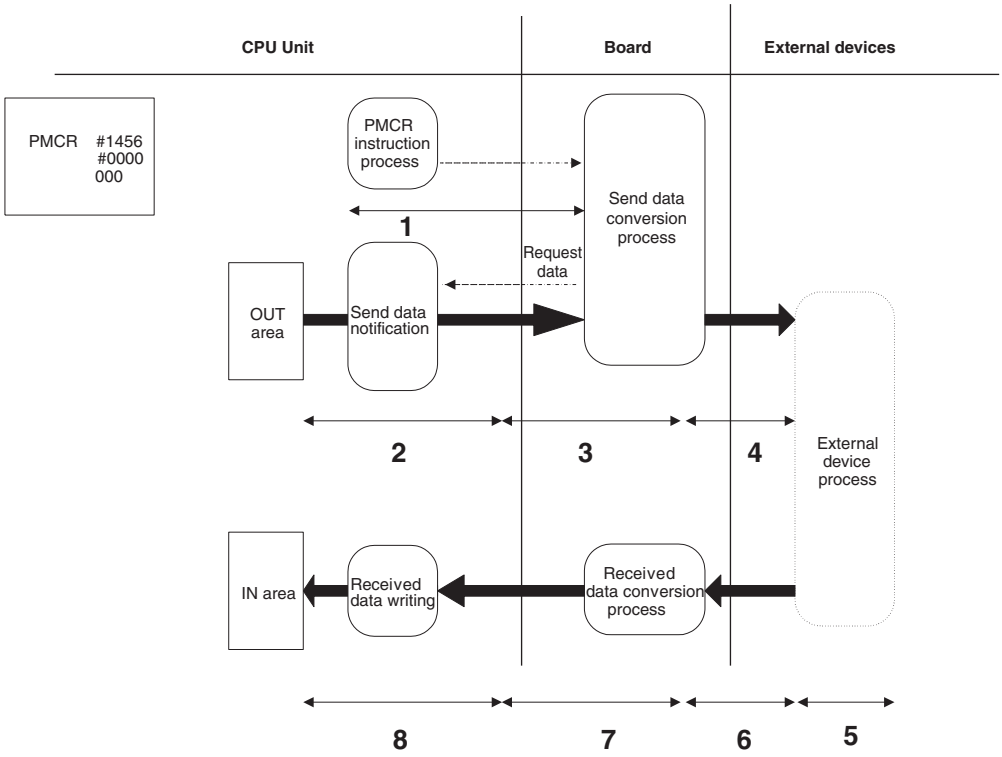

The communications response time is the total time from 1 to 8 in the above figure.

Number	Function	Time Required	Description
1	PMCR instruction executing notification process time	About 40 µs	The time from the start of PMCR instruction to the end of the instruction notification to the PMSU.
2	Send data notification process time	One-cycle time maximum	The time required for the data transfer based on the PMSU request.
3	Send data conversion process time	Depends on the number of conversion bytes	The time required for the data conversion based on the specified conversion mode which finishes at the start of data sending to the external device.
4	Send data transmission time	Number of data characters x one-character bit/ transmission rate	The time required for the data transmission to the external device. (Use double the calculated time because idle time exists between send characters.)
5	External device process time	Depends on the external device process	The time required for the external device process according to the PLC's command which finishes by the start of the response data sending.
6	Received data transmission time	Number of data characters x one-character bit/ transmission rate	The time required for the receive data transmission from the external device. (Use two to five times the calculated time because idle time exists between the receive characters.)
7	Received data conversion process time	Depends on the number of conversion bytes	The time required for the receive data conversion from the external device based on the specified conversion mode which finishes at the end of data.
8	Received data writing process time	One-cycle time maximum	The time required for the received data transfer to I/O memory.

Note Although the data conversion process times of 2 and 6 vary according to the PLC operation status, the maximum values can roughly be estimated by the following calculation formula:
2: The send data conversion process time = 10,000 µs + one-byte conversion time x number of conversion bytes
(one-byte conversion time→No conversion: 15 µs, ASCII conversion: 40 µs, hexadecimal conversion: 55 µs)
6: The receive data conversion process time = 100 µs + one-byte conversion time x number of conversion bytes
(one-byte conversion time→No conversion: 15 µs, ASCII conversion: 30 µs, hexadecimal conversion: 15 µs)

- Communications Response Time Using the Direct Addressing
  Illustrated below is the data flow when the direct addressing is used:

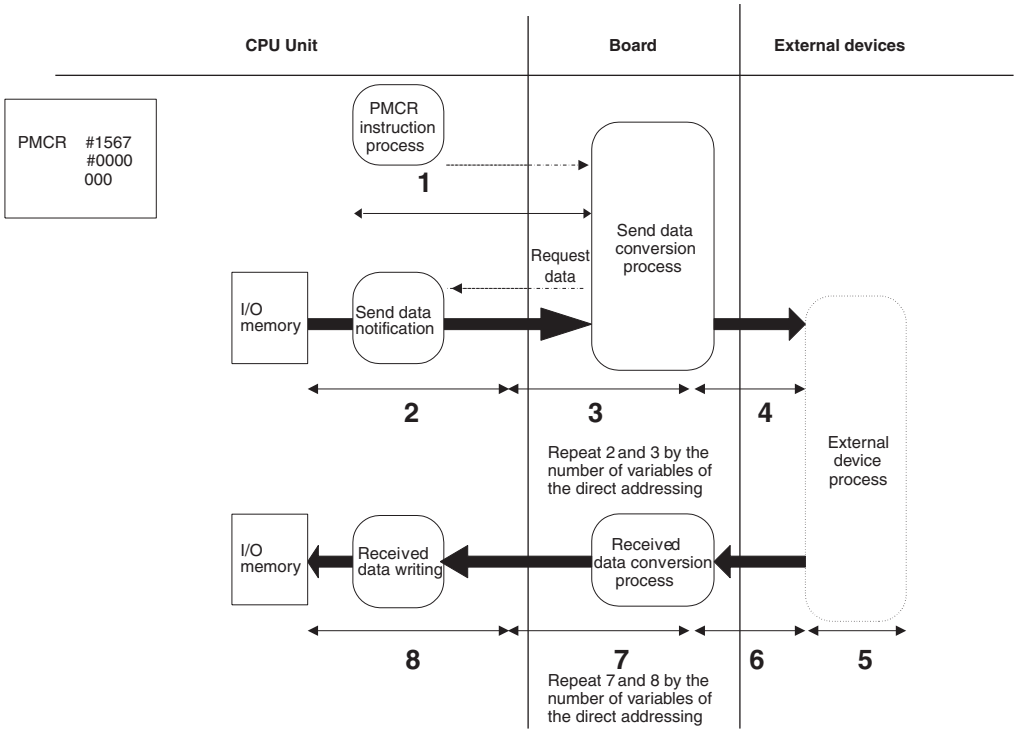

The communications response time is the total time from 1 to 8 in the above figure. The functions 2 and 3 are repeated by the number of variables of the direct addressing of the send message while 7 and 8 are repeated by those of the receive message.

Number	Function	Time Required	Description
1	PMCR instruction executing notification process time	About 40 µs	The time from the start of PMCR instruction to the end of the instruction notification to the PMSU.
2	Send data notification process time	One-cycle time maximum	The time required for the send data transfer based on the PMSU request.
3	Send data conversion process time	Depends on the number of conversion bytes	The time required for the sent data conversion based on the specified conversion mode which finishes at the start of data sending to the external device.
4	Send data transmission time	Number of data characters x one-character bit/ transmission rate	The time required for the data transmission to the external device. (Use double the calculated time because idle time exists between send characters.)
5	External device process time	Depends on the external device process	The time required for the external device process according to the PLC's command which finishes by the start of the response data sending.
6	Received data transmission time	Number of data characters x one-character bit/ transmission rate	The time required for the received data transmission from the external device. (Use two to five times the calculated time because idle time exists between the receive characters.)
7	Received data conversion process time	Depends on the number of conversion bytes	The time required for the received data conversion from the external device based on the specified conversion mode which finishes at the end of data.
8	Received data writing process time	One-cycle time maximum	The time required for the received data transfer to I/O memory.

Note Although the data conversion process times of 2 and 6 vary according to the PLC operation status, the maximum values can roughly be estimated by the following calculation formula:
2: The send data conversion process time = 10,000 µs + one-byte conversion time x number of conversion bytes
(one-byte conversion time→No conversion: 15 µs, ASCII conversion: 40 µs, hexadecimal conversion: 55 µs)
6: The receive data conversion process time = 100 µs + one-byte conversion time x number of conversion bytes
(one-byte conversion time→No conversion: 15 µs, ASCII conversion: 30 µs, hexadecimal conversion: 15 µs)

- The Overhead at 1:N Connection
  When the link word area or the direct addressing area is used, the send data is transferred from the CPU Unit at every step, therefore time is required before the actual start of the data sending as follows:
- When the link word area is used: The total time of 2 + 3 in the above figure (the link word)
- When the direct addressing is used: The total time of 2 + 3 in the above figure (the direct addressing)

These times are not required if the event (operand addressing) area is used, because the beginning of sequence only in the send data is transferred from the PLC's CPU Unit.

4-9 Cycle Time Performance

When using the protocol macro function with the PMSU, the cycle time for the CPU Unit of the CS/CJ will vary within the ranges shown below. In order to fix the cycle time, using the fixed cycle time function at the CPU Unit, set a fixed cycle time based on the value for the maximum variation time.

- Serial Communications Board
  Minimum variation time = 0.25 ms (common processing time)
  Maximum variation time = 0.25 ms + 0.001 ms × maximum number of words of send/receive data (0 to 500 words) + 1.3 ms
- Serial Communications Unit
  Minimum variation time (per Unit) = 0.25 ms (common processing time)
  Maximum variation time (per Unit) = 0.25 ms + 0.001 ms × maximum number of words of send/receive data (0 to 500 words)

SECTION 5
Object Creation

This section describes how to create objects, such as projects, protocols, sequences, steps, messages, and matrices.

5-1 Creating Projects and Protocols 204
5-1-1 Creating a New Project 204
5-1-2 Creating a New Protocol 205
5-1-3 Renaming a Protocol 206
5-1-4 Setting the Protocol Sequence Number Range 207
5-1-5 Setting the Board and Unit. 207
5-2 Creating Sequences and Steps 208
5-2-1 Creating a New Sequence 208
5-2-2 Creating a New Step. 208
5-3 Creating Messages and Matrices 209
5-3-1 Creating a New Message 209
5-3-2 Creating a New Matrix. 210
5-4 System Protocol Display and Editing. 211
5-4-1 Displaying System Protocols 211
5-4-2 Copying System Protocols or Sequences. 211

5-1 Creating Projects and Protocols

5-1-1 Creating a New Project

Use the following procedure to create a new project.

Create a new project following the steps 1 and 2 below if the CX-Protocol has been started from the Windows Start Menu, or by right-clicking a Serial Communications Board/Unit in the I/O Table Window opened from the CX-Programmer and selecting ***Start Special Application – Start Only*** from the pop-up menu.

Steps 1 and 2 will not be required if the CX-Protocol has been started by selecting ***Start Special Application – Start with Settings Inherited*** from the pop-up menu.

A new project will be automatically created and the Device Type setting and online/offline status will be inherited from the CX-Programmer.

1,2,3...

1. Select **New** from the **File** Menu or left-click the **New** Button from the toolbar. Alternatively, a new project is created by pressing the **Ctrl+N** Keys.
2. The following window will be displayed. Select the device type and network type.

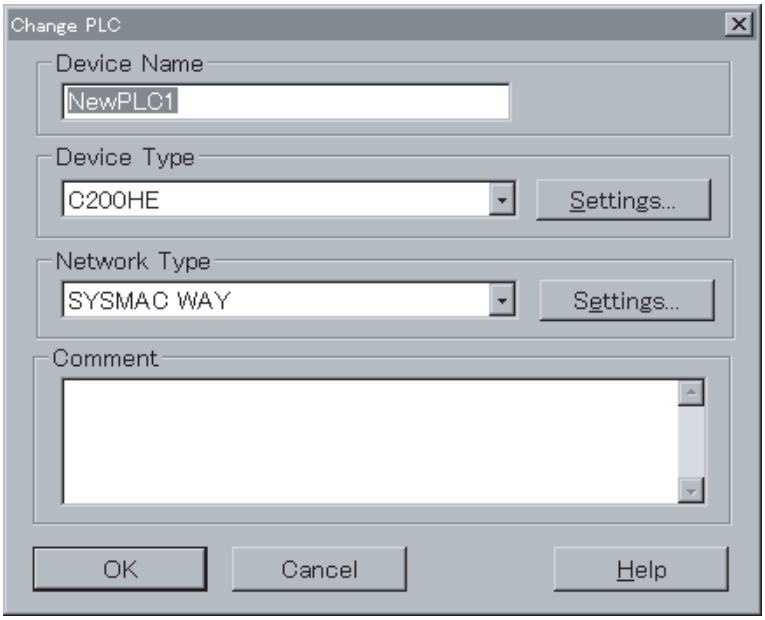

For details of settings, refer to *10-2 Communications Settings between Personal Computer and PLC*.

3. The following project window will be displayed when the device type is selected.

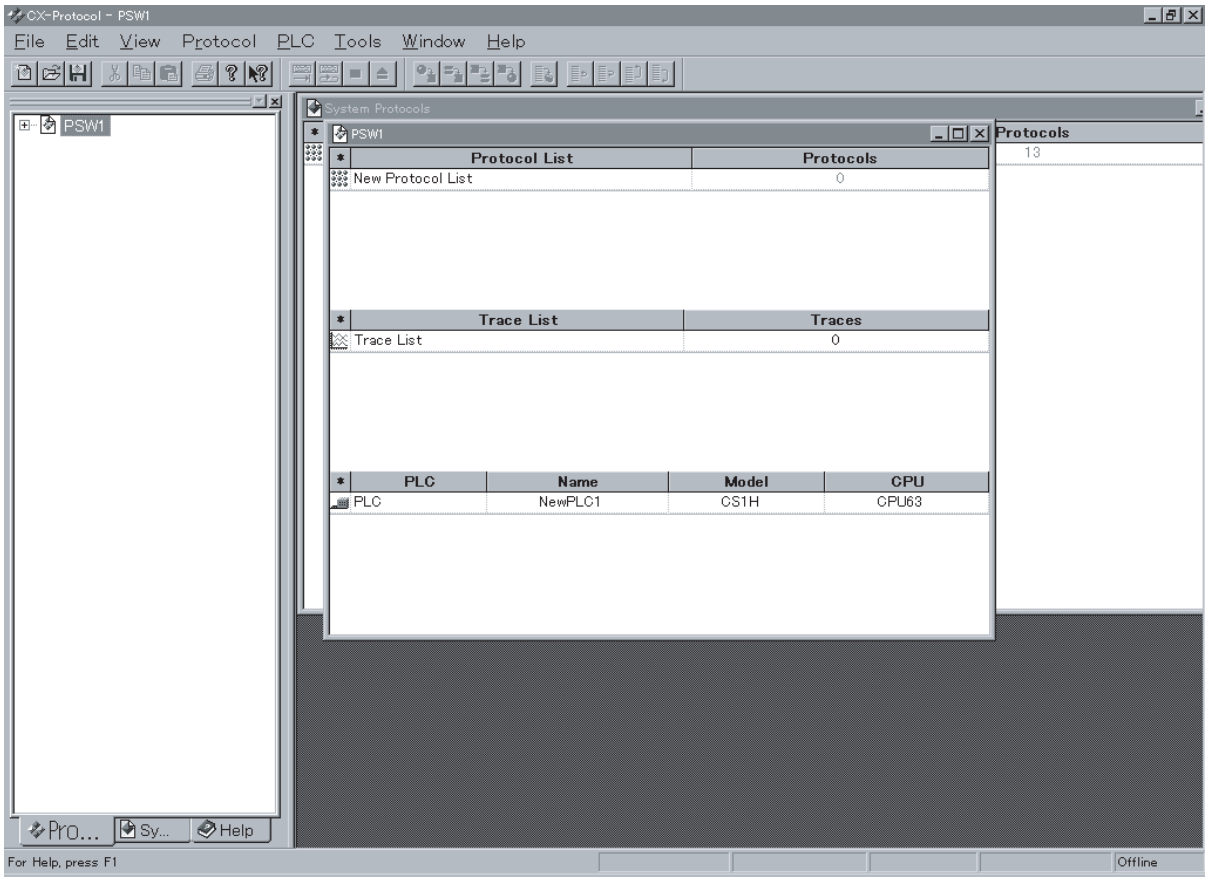

Each new project is given a default name “PSW□,” which is displayed in the title bar, and may be changed prior to saving the project.

5-1-2 Creating a New Protocol

Use the following procedure to create a new protocol in the protocol list.

1,2,3...

1. Double-click the **Project** Icon in the project workspace and select and highlight the protocol list. Alternatively, the protocol list is highlighted by left-clicking or double-clicking the **Protocol List** Icon in the project window.
2. Select **Create** by right-clicking the **Protocol List** Icon in the project workspace. Alternatively, point to **Create** from the pop-up menu in the project window and select **Protocol** or select **Protocol** from the **Protocol** Menu.

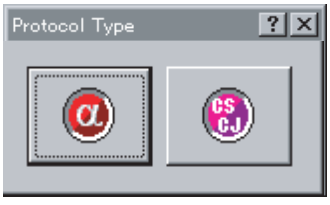

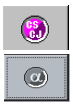

3. Select the protocol type by left-clicking the **CS/CJ Protocol** Icon or the **C200HX/HG/HE Protocol** Icon according to the protocol type.

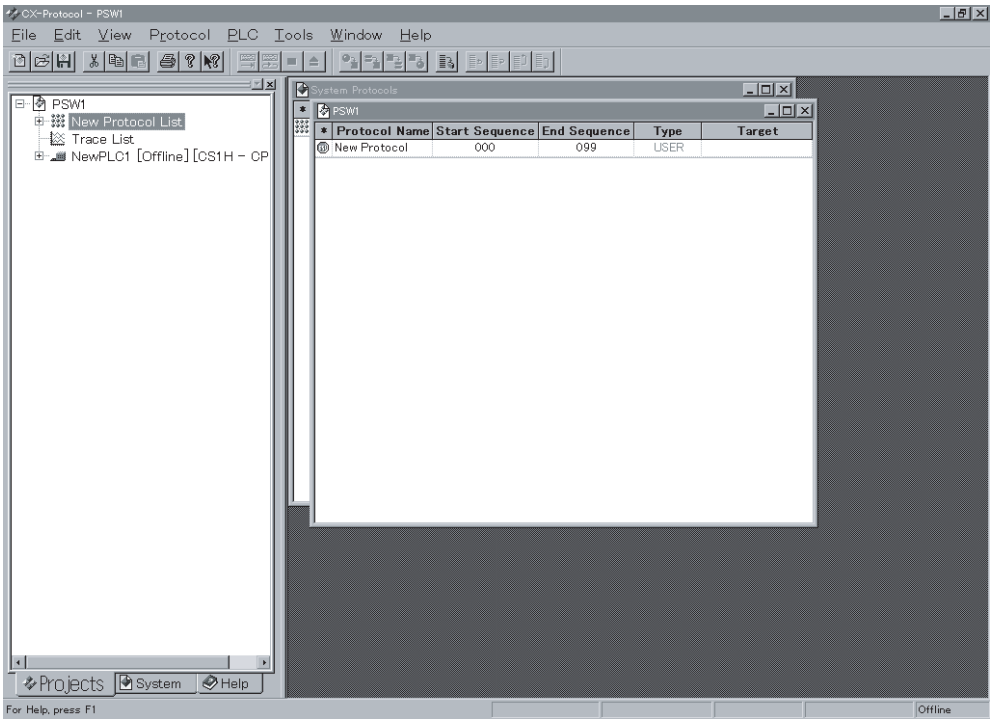

5-1-3 Renaming a Protocol

The new protocol under the default name **New Protocol** will be displayed in the project window. Use the following procedure to rename the protocol.

1,2,3...

1. Left-click the **Protocol Name** in the project window, or select the **Protocol Name** and press the **Enter** Key. The current protocol name will become an editable field.

2. Input the new protocol name and press the **Enter** Key. The new protocol name must not exceed 30 characters.

5-1-4 Setting the Protocol Sequence Number Range

Use the following procedure to specify the sequence numbers that are used by the specified protocol within a range between 000 and 999. The range of sequence numbers used by system protocols cannot be changed.

1,2,3...

1. Left-click the **Start Sequence** associated with the protocol in the protocol list. Alternatively, select the **Start Sequence** and press the **Enter** Key. The current start sequence will become an editable field.

2. Input the starting number and press the **Enter** Key.
3. Input the end number and press the **Enter** Key.

   Input the value within a range between 000 and 999 into the **Start Sequence** or **End Sequence** Fields for the associated protocol.

5-1-5 Setting the Board and Unit

Set the PMSU, through which protocols are transferred online to the PLC.

1,2,3...

1. Left-click the **Target**. Once the online connection is enabled, the names of the PMSU actually mounted will be displayed.

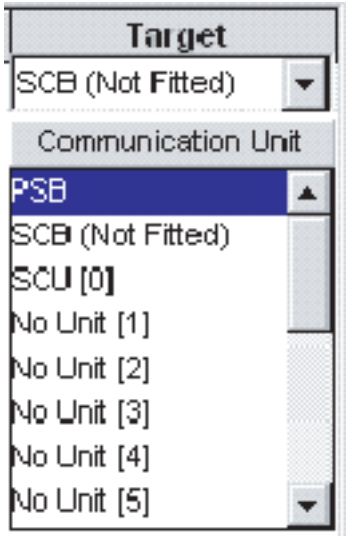

Note If the project has not been used online yet, **SCB (Not Fitted)** for the Serial Communications Board and **No Unit [*Unit No.*]** for the Serial Communications Unit will be displayed.

2. Select the Board/Unit from the drop-down list. If the PLC is CS/CJ, select **SCB** for the Serial Communications Board and specify the unit number for each Serial Communications Unit (**SCU [ ]**). If the PLC is the C200HX/C200HG/C200HE, select the **Communications Board**.

   Example: The Serial Communications Unit with unit number 0 is selected online for the CS/CJ.

5-2 Creating Sequences and Steps

5-2-1 Creating a New Sequence

Use the following procedure to create a new sequence in the protocol.

1,2,3...

1. Double-click the **Protocol List** Icon in the project workspace and select and highlight the protocol where the new sequence is to be created. Alternatively, left-click or double-click the **CS/CJ Protocol** Icon or **C200HX/C200HG/C200HE Protocol** Icon in the project window according to the protocol type.
2. Select **Sequence** by right-clicking the **Protocol** Icon in the project workspace. Alternatively, select the **Create** from the pop-up menu in the project window or select **Sequence** from the **Protocol** Menu.
3. The new protocol with the default name **New Sequence** will be displayed in the protocol.

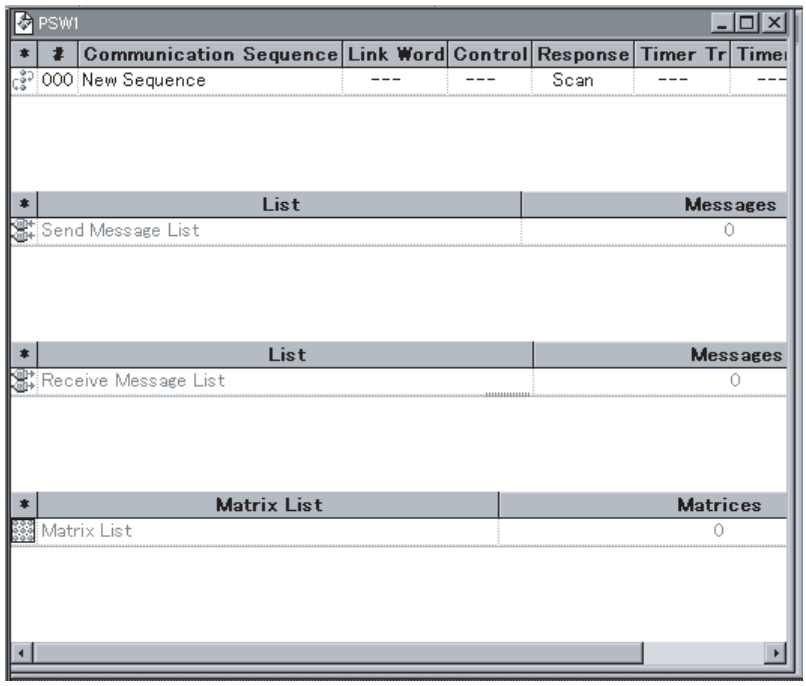

Note For details of each input item, refer to *SECTION 7 Sequence Setting and Editing.*

5-2-2 Creating a New Step

Use the following procedure to create a new step in the sequence.

1,2,3...

1. Double-click the **Protocol** Icon in the project workspace and select and highlight the sequence where the new step is created. Alternatively, double-click the **Sequence** Icon in the project window.
2. Right-click on the sequence icon in the project workspace or in the project window, point at **New** in the pop-up menu, and select **Step**. The step can also be selected from the **Protocol** Menu. The new step will be added to the list.

PSW1

*	Step	Repeat	Command	Retry	Send Wait	Send Message	Recv Message	Response	Next	Error
	00	RSET/001	Send	#	---		########	YES	End	Abort

Note For details of each input item, refer to *SECTION 8 Step Setting and Editing*.

5-3 Creating Messages and Matrices

5-3-1 Creating a New Message

Use either of the following procedures to create a new message.

1,2,3...

1. Right-click the **Send Message** or **Receive Message** Field in the step list, and select **New Message** from the pop-up menu, when the **Message Editor** Dialog Box will be displayed. Specify each input item and order in the dialog box.
2. Create the new message in the message list independently from the steps and input each item in either of the following method.
   a) Input the data for each item field beginning with the header. Specify and input the order and items of the data in the data field.
   b) Display the **Message Editor** Dialog Box from the data field. Specify and input the order and items of the order in the dialog box.

Creating a New Message in *Send Message* or *Receive Message* Field for a Step

Use the following procedure to create a new message for a step.

1,2,3...

1. Right-click the **Send Message** or **Receive Message** Field for a step and select **New Message** from pop-up menu.
2. The **Message Editor** Menu Dialog Box will be displayed. Input the message name in the **Name** Field.

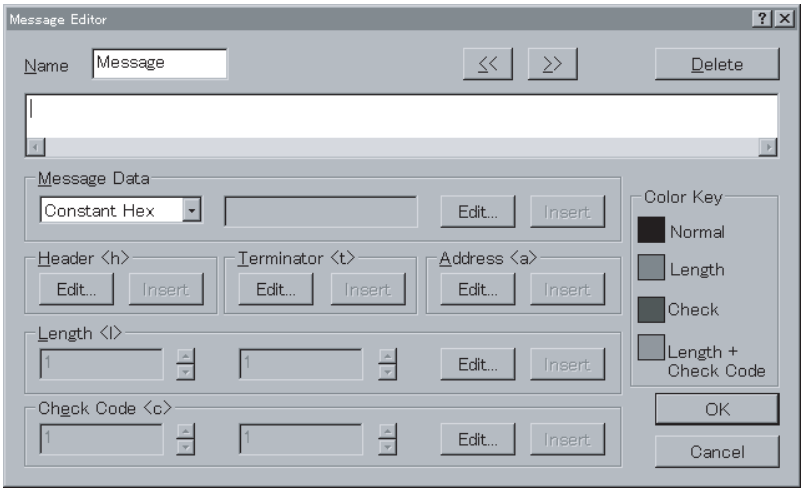

3. Create the message as appropriate. Refer to *9-1 Creating Messages* for details on how to construct a message.
4. Left-click the **OK** Button to accept the settings. Click the **Cancel** Button to leave the settings unchanged.

Creating a New Message from the Message List

Use the following procedure to create a new message from the message list.

1,2,3...

1. Double-click the **Protocol** Icon in the project workspace and select and highlight the receive message or send message list. Alternatively, double-click the **Receive Message List** Icon or **Send Message List** Icon in the project window.
2. Select the send message or receive message references by right-clicking the **Send Message List** Icon in the project workspace. Alternatively, select the **Create** from the pop-up menu in the project window and select the send message or receive message references or select the send message or receive message references from the **Protocol** Menu.

*	Send Message	Header <h>	Terminator <t>	Check code <c>	Length <l>	Address <a>	Data
	Message						

3. Left-click **Data** and left-click the **Enter** Button or press the **Enter** Key. The **Message Editor** Menu Dialog Box will be displayed. For details of how to create a message, refer to *9-1 Creating Messages*.

5-3-2 Creating a New Matrix

Use the following procedure to create a new matrix.

1,2,3...

1. Left-click the **Protocol** Icon in the project workspace and select and highlight the **Matrix List**. Alternatively, double-click the **Matrix List** Icon in the project window.
2. Right-click either the **Matrix List** in the project workspace or right-click the project window, select **Create** from the pop-up menu, and select **Matrix**. **Matrix** can also be selected from the **Protocol** Menu.

*	Matrix	Cases
	Matrix	1

Note A new matrix cannot be created from any step. Create it in the matrix list.

Creating a New Case for a Matrix

Use the following procedure to create a new message in a matrix.

1,2,3...

1. Left-click the **Matrix List** Icon in the project workspace and select and highlight the matrix, for which a new case is created. Alternatively, double-click the **Matrix** Icon in the project window.
2. Select **Matrix Case** by right-clicking the matrix position in the project workspace. Alternatively, select the **Create** from the pop-up menu and select **Matrix** or select **Matrix** from the **Protocol** Menu.

*	Case Number	Receive Message	Next Process
	00		End
	15	Other	End

5-4 System Protocol Display and Editing

5-4-1 Displaying System Protocols

System protocols are available for communications with OMRON's Units, such as the Temperature Controller, Panel Meter, Bar-code Reader, and Modem. By clicking the **System** Tab on the bottom of the project workspace, the system protocol list will be displayed. By double-clicking the **Project** Icon in the project workspace and double-clicking the **Protocol List** Icon, the protocol list will be displayed in the project window. Alternatively, the protocol list will be displayed by double-clicking the **Protocol List** Icon in the project window.

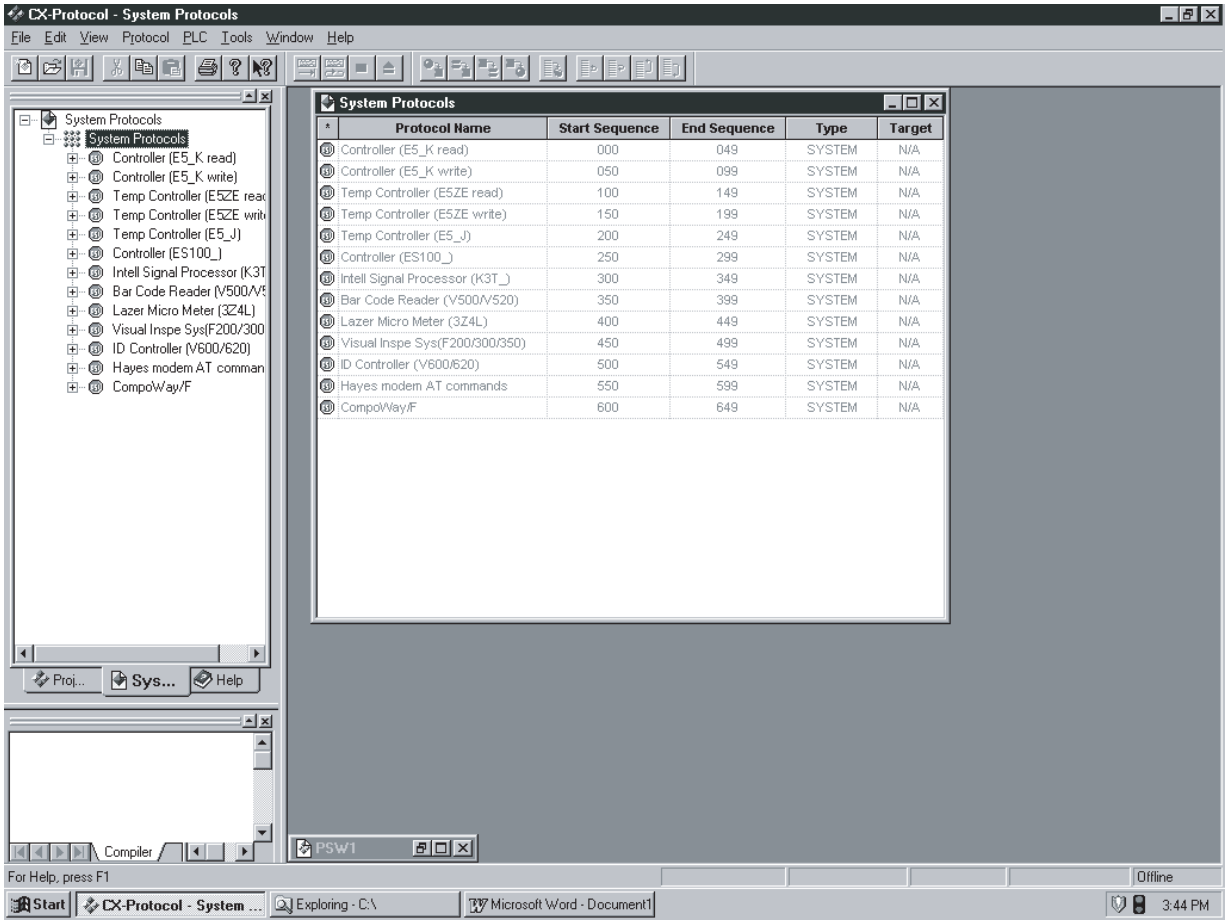

Note The system protocol varies with the **System**. The contents of the protocol cannot be edited directly or displayed on screen in the right pane.

The contents can be edited or displayed by copying the system protocol to a user defined protocol, but the protocol type changes to **User** once pasted into a new protocol list. A sequence as well as a system protocol can be copied.

5-4-2 Copying System Protocols or Sequences

Use the following procedure to copy system protocols.

Copying and Pasting All the Protocols in the List to New Project

1,2,3...

1. Select **New** from the **File** Menu or left-click the **New** Icon from the toolbar and create a new project.
2. Left-click the **System** Tab on the bottom of the project workspace, select the protocol list icon in the project workspace, and press the **Ctrl+C** Keys

or right-click and select **Copy** from the pop-up menu. Alternatively, select **Copy** from the **Edit** Menu.

3. Left-click the **Project** Tab on the bottom of the project workspace. After left-clicking the **Project** Icon, press the **Ctrl+V** Keys or left-click the **Paste** Icon or right-click and select the **Paste** Button from the pop-up menu in the project window or select **Paste** from the **Edit** Menu. The protocols will be copied to the new project.

Copying and Pasting Selected Protocol(s) to New Project

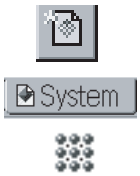

1,2,3...

1. Select **New** from the **File** Menu or left-click the **New** Button from the toolbar and create a new project.
2. Left-click the **System** Tab on the bottom of the project workspace, select the **Protocol List** Icon in the project workspace, and select the protocol to be copied in the project window. More than one protocol can be selected by pressing the **Shift** Key and selecting another protocol to extend the selection, or by pressing the **Ctrl** Key and selecting another protocol to add to the selection.
3. Press the **Ctrl+C** Keys or left-click the **Copy** Icon and select **Copy** from the pop-up menu. Alternatively, select **Copy** from the **Edit** Menu.
4. After selecting the new project and selecting the **Protocol List** Icon to be pasted into the project workspace, press the **Ctrl+V** Keys or left-click the **Paste** Icon or right-click and select **Paste** from the pop-up menu or select **Paste** from the **Edit** Menu. The system protocol or system protocols selected will be copied to the protocol list in the new project.

Copying and Pasting a Sequence to a Specified Protocol

1,2,3...

1. Select **New** from the **File** Menu or left-click the **New** Button from the toolbar and create a new project.
2. Left-click the **System** Tab on the bottom of the project workspace and select the sequence.
3. Press the **Ctrl+C** Keys or left-click the **Copy** Icon or right-click and select **Copy** from the pop-up menu. Alternatively, select **Copy** from the **Edit** Menu.
4. Select the **Protocol** Icon of the destination and press the **Ctrl+V** Keys or left-click the **Paste** Icon or right-click and select **Paste** from the pop-up menu. Alternatively, select **Paste** from the **Edit** Menu. The selected sequence will be placed at the end of the protocol. Send or receive messages will not be copied together with the sequence.

Note Standard system protocol sequences cannot be pasted into an C200HX/HG/HE protocol.

SECTION 6
Project and Protocol Editing

This section describes details of the editing of projects and protocols.

6-1 Editing Projects 214
- 6-1-1 Adding Information to a Project 214
- 6-1-2 Opening a Project 214
- 6-1-3 Opening Project Windows 215
- 6-1-4 Overwriting and Renaming a Project 215
- 6-1-5 Saving a Project 215
- 6-1-6 Closing a Project 216

6-2 Editing Protocols 216
- 6-2-1 Displaying a Protocol List 216
- 6-2-2 Renaming a Protocol in the List 216
- 6-2-3 Deleting a Protocol from the List 216
- 6-2-4 Copying a Protocol 217

6-1 Editing Projects

A project consists of a protocol list, trace list, and PLC. The protocol list includes all the protocols in the project. A protocol consists of sequences. The PLC is in control of the system setup and the tracing of send and receive messages. The trace list is data of trace results added to the project. The CX-Protocol uses each project as a single file for the control and management of the protocols, trace list, and PLC.

Refer to *10-1 PLC System Configuration* for details of the PLC. Refer to *12-1 Tracing Transmission Lines* for details of the trace.

Note Keep the following in mind before using a floppy disk.

- Be sure to copy the project files in the floppy disk to the hard disk before using the project files.
- Do not save project files directly to the floppy disk. Save the project files in the hard disk first. Then use an appropriate **Windows** program, such as the **Explorer**, to copy the project files to the floppy disk.
- Do not eject the floppy disk from the disk drive while the projects in the floppy disk are in use.
- If a message is displayed advising the user that the disk is full while overwriting the projects, it means that the floppy disk does not have adequate space and the project files cannot be saved. If this happens, be sure to save the project files in the hard disk.

6-1-1 Adding Information to a Project

Use the following procedure to add information to a project.

1,2,3...

1. Right-click the project name in the project workspace and select **Properties** from the pop-up menu. The **Properties** Dialog Box will be displayed.
2. Input the information on the project and left-click the **Apply** Button. Left-click the **Cancel** Button to leave the settings unchanged.

6-1-2 Opening a Project

Use the following procedure to open an existing project.

1,2,3...

1. Select **Open** from the **File** Menu or left-click the **Open** Icon from the toolbar or press the **Ctrl+O** Keys.
2. The **Open** Dialog Box will be displayed.

   Select the project from the list in the dialog box. The project file *.psw will be displayed as a default project file. If any other type of file is required, select it from the **File of Type** drop-down list.

   The following types of files are available. If opening any file other than project files, refer to *11-3 Importing Protocol Data from PST/PSS Files.*

   The CX-Protocol project file is created by the CX-Protocol, the PST project file is created by the SYSMAC-PST, and the PSS files are created by DOS Protocol Support Software.

File type	Contents	File extension	Read	Write
CX-Protocol project file	Project file created by the CX-Protocol	*.psw	❍	❍
PST project file	Project file created by the SYSMAC-PST	*.psw	❍	×
PSS system setup file	Setup data file of communications ports A and B of PSS communications board	*.pts	❍	×
PSS protocol file	File with PSS protocol data only	*.pt1	❍	×
PSS trace data file	File with PSS or SYSMAC-PST trace data only	*.ptr	❍	×

To change the current folder for another one, select the folder from **File Look in** in the drop-down list.

3. Left-click the **Open** Button or double-click the selected project. The project will open. Left-click the **Cancel** Button to leave the settings unchanged.

Note The icons on the right-hand side in the **File Look in** Field have the following functions.

- By left-clicking the **Up One Level** Icon, the folder one level higher is opened.
- By left-clicking the **Create New Folder** Icon, the new folder is created in the current folder.
- By left-clicking the **List** Icon, the folder name and the file names in the current folder are listed on screen.
- By left-clicking the **Details** Icon, the folder name and the names, sizes, types, and last-modified dates of the files in the current folder will be displayed.

6-1-3 Opening Project Windows

The CX-Protocol makes it possible to open more than one project window.

After opening a new window, it is possible to display the projects currently opened in other windows and other projects can be displayed in the new window.

To add a new project window for the projects currently opened, select **New Window** from the **Window** Menu. The new project window will be displayed on the front side and each of the previous project windows will be placed behind. Each window is given a unique identifier.

6-1-4 Overwriting and Renaming a Project

Use the following procedure to overwrite a project.

1,2,3...

1. Select **Save** from the **File** Menu or left-click the **Save** Icon from the toolbar, or select **Save** from the pop-up menu after right-clicking the **Project** Icon or pressing the **Ctrl+S** Keys.
2. The project will be saved under the present project name.

   When saving a new project in this method, the **Save as** Dialog Box will be displayed with the default file name, “PSW□.” Change the default name to an appropriate name.

Note Input the project name in the **File name** Field of the **Save as** Dialog Box.

6-1-5 Saving a Project

To save an existing project under a different project name or save a new project under a new name, right-click the **Project** Icon and select **Save as** from the pop-up menu.

Use the following procedure to save the project under a different name.

1,2,3...

1. Select **Save as** from the **File** Menu or right-click the **Project** Icon and select **Save as** from the pop-up menu. The **Save as** Dialog Box will be displayed on screen.
2. To change the current folder for another one, select the folder from **File Save in** in the drop-down list. Then change the **Save as type** Field to CX-Protocol project file (*.psw).

Input the project name in the **File name** Field. To overwrite a project, select the project from the list.

3. Left-click the **Save** Button or press the **Enter** Key. Left-click the **Cancel** Button to close the **Save as** Dialog Box without saving the project.

6-1-6 Closing a Project

To close a currently open project, select **Close** from the **File** Menu or left-click the **Close** Button from the project window. Closing a project will require confirmation if the project has not been saved since its last edit. Select **Yes** Button to save the project.

6-2 Editing Protocols

6-2-1 Displaying a Protocol List

Use either of the following procedures to display a protocol list for the current project.

- By double-clicking the **Project** Icon in the project workspace and double-clicking the **Protocol List** Icon, the protocol list will be displayed in the project window.
- By double-clicking the **Protocol List** Icon in the project window, all the protocols in the protocol list will be displayed on screen.

6-2-2 Renaming a Protocol in the List

Use the following procedure to rename a registered protocol.

Note System protocol names cannot be changed.

1,2,3...

1. Left-click the **Protocol Name** setting in the protocol list or select the **Protocol Name** setting. Press the **Enter** Key.
2. The current protocol name will become an editable field. Input the new protocol name and press the **Enter** Key. The new protocol name must not exceed 30 characters.

Note Once a protocol has been deleted it cannot be recovered.

6-2-3 Deleting a Protocol from the List

Use the following procedure to delete a protocol.

Note System protocols cannot be deleted.

1,2,3...

1. Left-click the icon of the protocol to be deleted from the protocol list. More than one protocol can be selected by pressing the **Shift** Key and selecting another protocol to extend the selection, or by pressing the **Ctrl** Key and selecting another protocol to add to the selection.

2. Left-click the **Delete** Icon from the toolbar or press the **Delete** Key or left-click the **Cut** Icon from the toolbar or press the **Ctrl+X** Keys to delete the protocol. The project can be deleted by right-clicking and selecting **Delete** from the pop-up menu.

Note Once a protocol has been deleted it cannot be recovered.

6-2-4 Copying a Protocol

Use the following procedure to copy a protocol.

Note System protocols can be copied, but the protocol type will change to **User** once pasted into a new protocol list.

1,2,3...

1. Left-click the icon of the protocol to be copied from the protocol list. More than one protocol can be selected by pressing the **Shift** Key and selecting another protocol to extend the selection, or by pressing the **Ctrl** Key and selecting another protocol to add to the selection.

2. Left-click the **Copy** Icon from the toolbar or press the **Ctrl+C** Keys. Alternatively, right-click and select **Copy** from the pop-up menu or select **Copy** from the **Edit** Menu.
3. Display a protocol in the project window so that the copied protocol or protocols can be pasted into the protocol.

4. Left-click the **Paste** Icon from the toolbar or press the **Ctrl+V** Keys. Alternatively, right-click and select **Paste** from the pop-up menu or select **Paste** from the **Edit** Menu. The pasted protocols will be placed at the end of the protocol list.

SECTION 7
Sequence Setting and Editing

This section describes details of the setting and editing of sequences.

7-1 Setting Sequences 220
7-1-1 Sequence Setting Screen 220
7-1-2 Setting Sequences 220
7-2 Editing Sequences 226
7-2-1 Displaying a Sequence List 226
7-2-2 Renaming Sequences 226
7-2-3 Changing an Existing Sequence Number. 227
7-2-4 Copying/Pasting Sequences 227
7-2-5 Deleting Sequences 227

7-1 Setting Sequences

7-1-1 Sequence Setting Screen

Refer to *3-2 Sequence Attributes (Common to All Steps)* for details on setting.

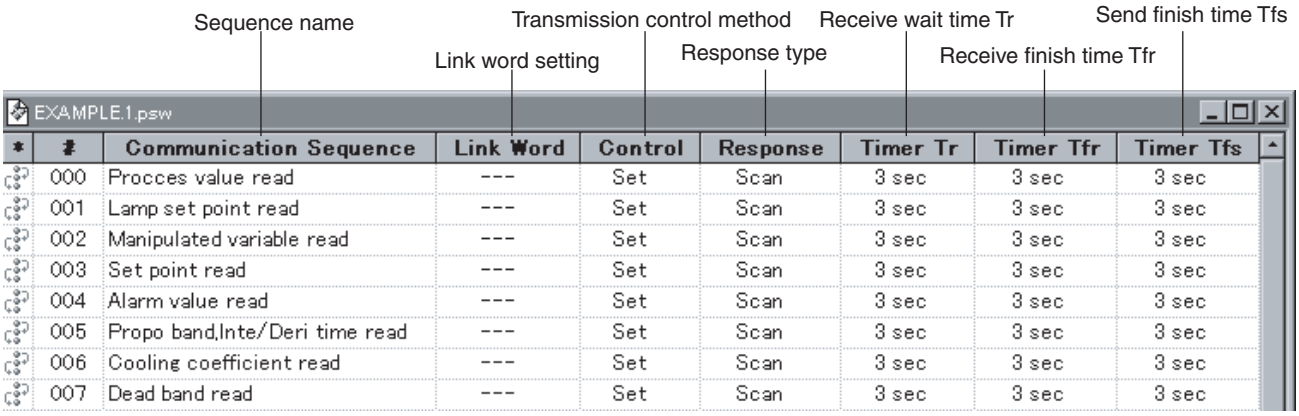

*	#	Communication Sequence	Link Word	Control	Response	Timer Tr	Timer Tfr	Timer Tfs
	000	Procces value read	---	Set	Scan	3 sec	3 sec	3 sec
	001	Lamp set point read	---	Set	Scan	3 sec	3 sec	3 sec
	002	Manipulated variable read	---	Set	Scan	3 sec	3 sec	3 sec
	003	Set point read	---	Set	Scan	3 sec	3 sec	3 sec
	004	Alarm value read	---	Set	Scan	3 sec	3 sec	3 sec
	005	Propo band,Inte/Deri time read	---	Set	Scan	3 sec	3 sec	3 sec
	006	Cooling coefficient read	---	Set	Scan	3 sec	3 sec	3 sec
	007	Dead band read	---	Set	Scan	3 sec	3 sec	3 sec

7-1-2 Setting Sequences

Settings that can be made for sequences using the CX-Protocol are shown in the following table.

Attribute	Content			
Link Word	Link 1	IN	IN Area	None, CIO, WR[*1], LR[*2], HR, AR, DM, EM.
			Address	Refer to *Link Word Designation* in the following section.
			Length	
		OUT	OUT Area	None, CIO, WR[*1], LR[*2], HR, AR, DM, EM.
			Address	Refer to *Link Word Designation* in the following section.
			Length	
	Link 2	IN	IN Area	None, CIO, WR[*1], LR[*2], HR, AR, DM, EM.
			Address	Refer to *Link Word Designation* in the following section.
			Length	
		OUT	OUT Area	None, CIO, WR[*1], LR[*2], HR, AR, DM, EM.
			Address	Refer to *Link Word Designation* in the following section.
			Length	
Transmission Control	RTS/CTS		None, Send, Receive, Send & Receive	
	Xon/Xoff		None, Send, Receive, Send & Receive	
	Modem		Select **With/without** using the check box.	
	Contention	Send Request Code	Code, ASCII, hexadecimal	
	Delimiters	Delimiter Send Code	Code, ASCII, hexadecimal	
		Delimiter Receive Code	Code, ASCII, hexadecimal	
Response Type			Scan[*3], Interrupt: Fixed #, Interrupt: Receive Case #	
Timer Tr	Value		00 to 99	
	Timer Unit		0.01s, 0.1s, 1s, 1 min	
Timer Tfr	Value		00 to 99	
	Timer Unit		0.01s, 0.1s, 1s, 1 min	
Timer Tfs	Value		00 to 99	
	Timer Unit		0.01s, 0.1s, 1s, 1 min	

Note 1. WR is only for the CS/CJ.

2. LR is only for the C200HX/HG/HE.
3. Default setting for the CX-Protocol.

Link Word Designation

Designate the data area shared between the PLC and Board/Unit. This setting is made for every sequence (common to steps).

When using the **Link Channel Designation** for designating the storage areas for send/receive data, the code numbers (I1, I2, O1, O2) designated here will be used.

1,2,3...

1. Left-click the **Link Word** Field of the sequence and then left-click the **Enter** Button or press the **Enter** Key.
   The **Link Channel Information** Dialog Box will be displayed.

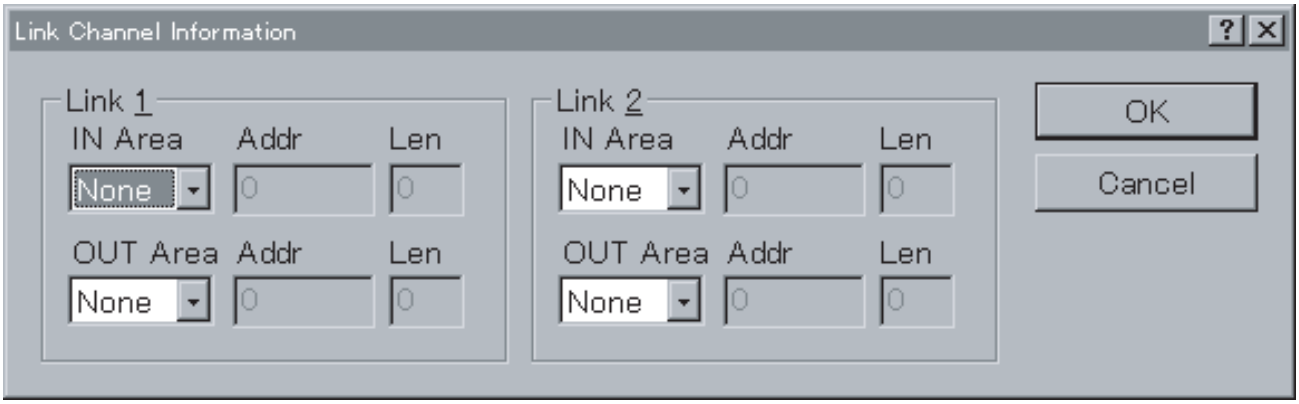

Perform Link 1 setting according to the following procedure. Follow the same procedure for the Link 2.

2. Select an appropriate area (CIO, WR, LR, HR, AR, DM) from the **IN Area** drop-down list in the **Link 1** Field. Select **None** if setting is not required.
3. Input the first word address of the IN Area of Link 1 in the **Addr** Field.
4. Input the number of words of the IN Area of Link 1 into the **Len** Field.
5. Set the area type, beginning address, and length for the OUT Area according to the same procedure.
6. Either press the **OK** Button to accept the setting or press the **Cancel** Button to leave the settings unchanged.

   The areas and setting ranges that can be used for link words are shown in the following list.

PLC model		CS-series	C200HX/HG/HE
Area and address that can be used for link word setting		CIO: 0000 to 6143 WR: 000 to 511 HR: 000 to 511 AR: 000 to 959 DM: 00000 to 32767 EM (note 2): 00000 to 32767	CIO (note 1): 000 to 511 LR: 00 to 63 HR: 00 to 99 AR: 00 to 27 DM: 0000 to 6655 EM (note 2): 0000 to 6143
Ranges of link words	I1	0 to 500	0 to 128
	O1	0 to 500	0 to 128
	I2	0 to 500	0 to 128
	O2	0 to 500	0 to 128
		The sum of I1+O1+I2+02 must be equal to or less than 500 words.	The sum of I1+O1+I2+02 must be equal to or less than 128 words.

Note

1. CIO indicates the I/O area, IR area, and AR area.
2. EM bank cannot be used for link words.

Setting Transmission Control Method

Set the same transmission control method as that designated by the external device (communications partner).

The transmission control method can be set to more than one method (for example, RTS/CTS flow control and modem control).

1,2,3...

1. Left-click the **Control** Field of the sequence and then left-click the **Enter** Button or press the **Enter** Key.
   The **Transmission Control** Dialog Box will be displayed.

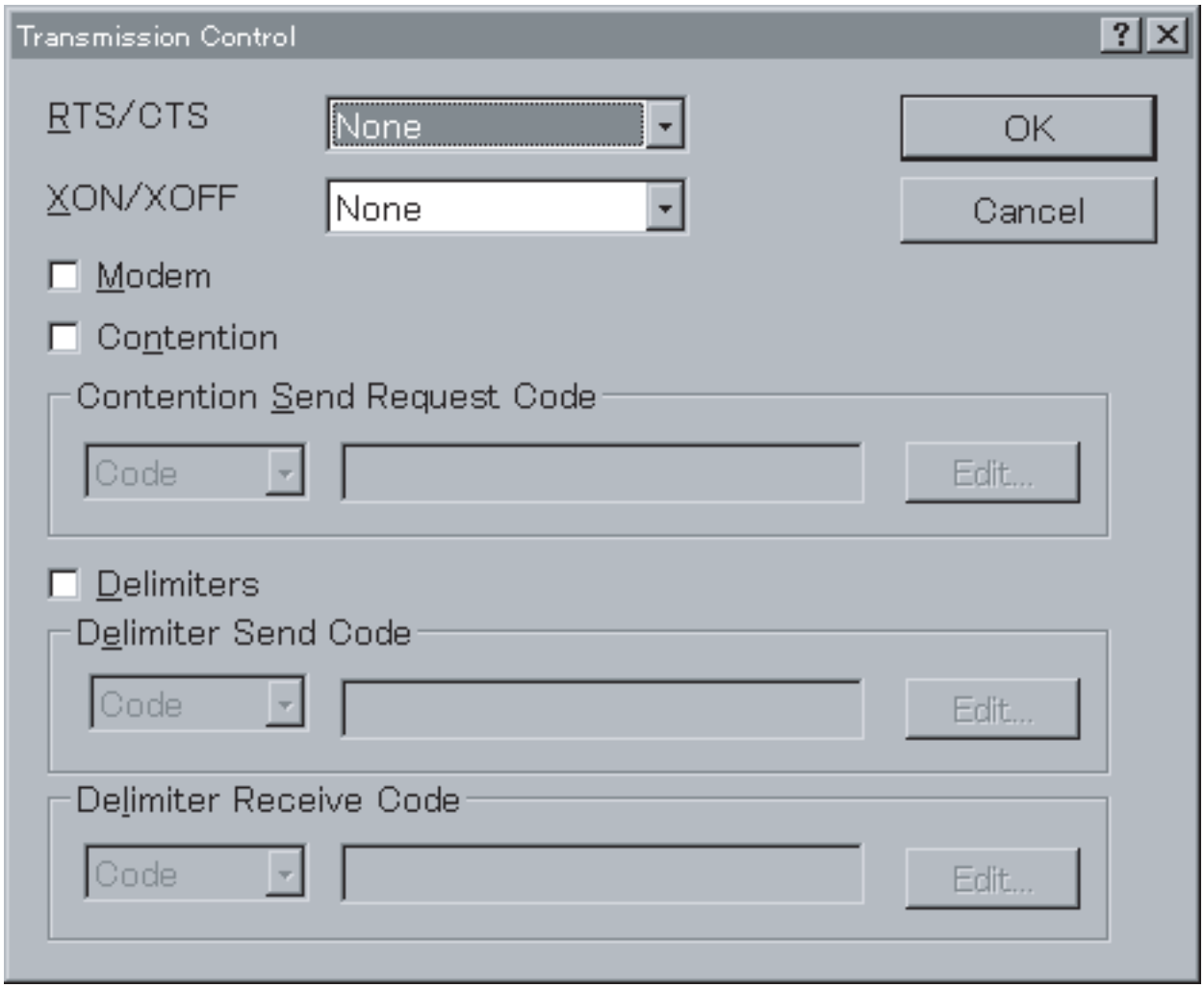

2. Set the parameters in the **Transmission Control** Dialog Box.
3. Left-click the **OK** Button to accept the settings or left-click the **Cancel** Button to leave the settings unchanged. If any of the following settings are made, “Set” will be displayed in the **Control** Field of the sequence.

RTS/CTS Flow Control

Data can be transmitted through the RTS/CTS flow control. Select an RTS/CTS control method from the drop-down list.

If the **RTS/CTS** Field is set to **None**, RTS/CTS flow control will not be performed.

If the **RTS/CTS** Field is set to **Send**, RTS/CTS flow control will be performed only when sending.

If the **RTS/CTS** Field is set to **Receive**, RTS/CTS flow control will be performed only when receiving.

If the **RTS/CTS** Field is set to **Send & Receive**, RTS/CTS flow control will be performed for both send and receive processing.

Xon/Xoff Flow Control

Data can be transmitted through the Xon/Xoff flow control. Select an Xon/Xoff control method from the drop-down list: None, Send, Receive and Send & Receive are available.

If the **Xon/Xoff** Field is set to **None**, Xon/Xoff flow control will not be performed.

If the **Xon/Xoff** Field is set to **Send**, Xon/Xoff flow control will be performed only when sending.

If the **Xon/Xoff** Field is set to **Receive**, Xon/Xoff flow control will be performed only when receiving.

If the **Xon/Xoff** Field is set to **Send & Receive**, Xon/Xoff flow control will be performed for both send and receive processing.

Note If both the RTS/CTS flow control and Xon/Xoff control are set for the CS/CJ Series, a **Protocol Macro Syntax Error** will be displayed when protocol macro is executed.

Modem Control

Data can be transmitted through the modem control. Left-click the **Modem** check box to either enable or disable the modem control.

If the **Modem** check box is not checked, modem control will not be performed. If the **Modem** check box is checked, modem control will be performed.

Contention Control

Data can be transmitted under the contention control. Left-click the **Contention** check box to either enable or disable contention control.

If the **Contention** check box is not checked, contention control will not be performed.

If the **Contention** check box is checked, contention control will be performed. This means that in order to obtain the right to send, a **Send Request Code** must be transmitted.
A send request code can be specified in Code, ASCII or Hexadecimal. Select a code from the **Contention Send Request Code** drop-down list. Select one from **Code**, **ASCII**, or **HEX**.

[Code]

1,2,3...

1. Select **Code** from the drop-down list.
2. Left-click the **Edit** Button. The **Code Entry** Dialog Box will be displayed.

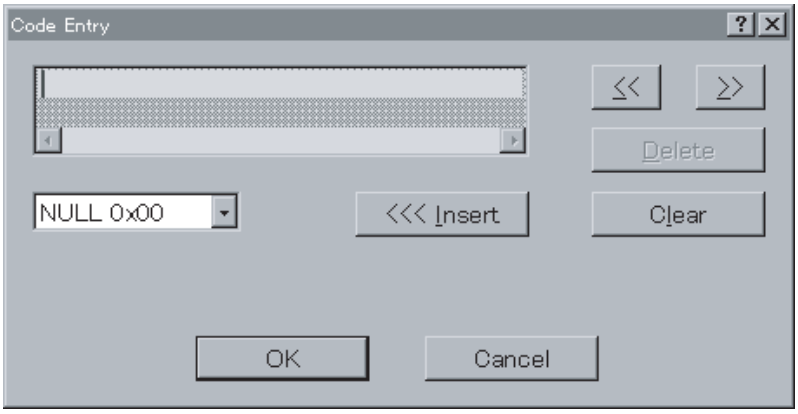

3. Select **Special Code**. Up to four special codes may be entered. Select the codes from the drop-down list and left-click the **Insert** Button to input the code(s) indicated.

Note Five or more special codes cannot be input. Left-click the **Clear** Button to clear all the special codes and input them again from the beginning. Left-click the **Delete** Button to delete the special code where the cursor is located. Left-click the **<<** or **>>** Button to move the cursor position.

4. Press the **OK** Button to accept the settings or press the **Cancel** Button to leave the settings unchanged.

[ASCII]

1,2,3...

1. Select **ASCII** from the drop-down list.
2. Type in ASCII characters (up to four characters) in the right field.

[Hexadecimal]

1,2,3...

1. Select **HEX** from the drop-down list.
2. Left-click the **Edit** Button.
   The **HEX Entry** Dialog Box will be displayed.
3. Select a button that corresponds to one digit of the hexadecimal digit. Up to eight digits may be entered. They will be displayed at the top of the dialog box. (If the 9th digit is entered, the 1st digit will be deleted.)

   Note Left-click the **CLR** Button to clear all the special codes. After clearing all the special codes, input them again from the beginning. Left-click the **DEL** Button to delete the special code where the cursor is located.
4. Left-click the **Enter** Button to accept the settings or the **Cancel** Button to leave the settings unchanged.

Delimiters

Data can be transmitted through the delimiter control. Left-click the **Delimiters** check box to either enable or disable the delimiter control.

If the **Delimiters** check box is not checked, delimiter control will not be performed.

If the **Delimiters** check box is checked, the delimiter control will be performed.

The delimiter set in the send and receive code can be designated in Code, ASCII, or Hexadecimal. Select one of them from the **Delimiter Send Code** or **Delimiter Receive Code** drop-down list. The input methods for the Code, ASCII, and Hexadecimal are the same as for the contention control.

Response Type

Use the following procedure to set the timing for writing received data in the I/O memory (designated by the fourth operand of the PMCR instruction for the CS/CJ and by the third operand of the PMCR instruction for the C200HX/HG/HE) and also to set the method for notifying the setting to the PLC.

This setting will be valid only when the write area is designated by the operand of the PMCR instruction and when the setting of the with/without response writing is set to **Yes**.

The notification types include **Scan**, **Interrupt: Fixed #** (See note.) and **Interrupt: Receive Case #** (See note.)**.**

Note With the CS, the **Interrupt : Fixed #** and the **Interrupt: Receive Case #** are applicable to the Serial Communications Board and with the C200HX/HG/HE, they are applicable only to the Communications Board. They cannot be used for the Serial Communications Unit for the CS/CJ.

1,2,3...

1. Left-click the **Response** Field of the sequence and then left-click the **Enter** Button or press the **Enter** Key.
   The **Response Type** Dialog Box will be displayed.

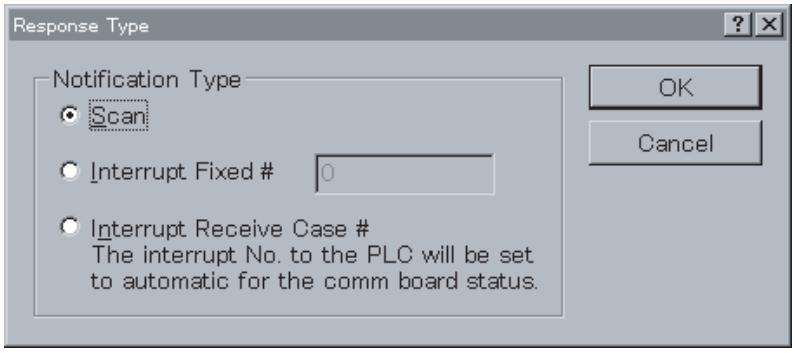

2. Select one of the notification types: **Scan**, **Interrupt mode: Fixed #** or **Interrupt mode: Receive Case #.** When the **Interrupt mode: Fixed #** Button is left-clicked, designate the external interrupt task number for the CS/CJ or the interrupt subroutine number for the C200HX/HG/HE in a range from 0 to 255.
3. Left-click the **OK** Button to accept the settings or the **Cancel** Button to leave the settings unchanged.

Scan Mode
The data in the receive buffer is written in the I/O memory (after conversion) when scanned by the CPU Unit. Refer to *3-2 Sequence Attributes (Common to All Steps)* for the writing timing.

Interrupt Mode: Fixed No. (See note.)
The data in the receive buffer is written in the I/O memory immediately after it is converted in the designated conversion method. After the received data is completely written in the I/O memory, designate the external interrupt task number for the CS or the interrupt subroutine number for the C200HX/HG/HE in a range from 0 to 255 to execute the interrupt processing for the CPU Unit.

Interrupt Mode: Receive Case No. (See note.)
The data in the receive buffer is written in the I/O memory immediately after it is converted in the designated conversion method. After the received data is completely written in the I/O memory, the external interrupt task number for the CS or the subroutine number for the C200HX/HG/HE is calculated based on the step number and the receive case number executed according to the following procedure to execute the interrupt processing for the CPU Unit. The interrupt task number or subroutine number (0 to 255) will be automatically calculated depending on the execution status of the Communications Board.

Note These modes are valid only with the Serial Communications Board for the CS and with the Communications Board for the C200HX/HG/HE. The modes cannot be used with the Serial Communications Unit for the CS/CJ. (If used, a protocol data error will occur when the sequence is executed.)

Setting Monitor Times (Tr, Tfr, Tfs)

The following procedure can be used to set monitor times for transmission processing.

Note The receive wait time (Ts) is set for every step. Refer to *SECTION 8 Step Setting and Editing.*

1,2,3...

1. Left-click the **Timer Tr, Timer Tfr**, or **Timer Tfs** Field and then left-click the **Enter** Button or press the **Enter** Key.
   The **Timer (Tr/Tfr/Tfs)** Dialog Box will be displayed.
   The following shows a dialog box for the receive wait time (Tr).

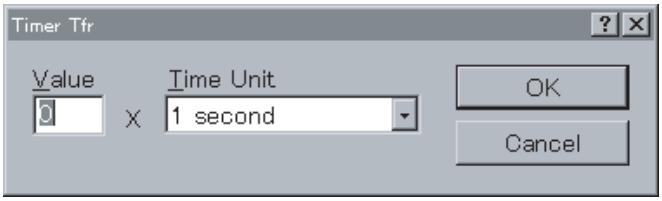

2. For receive wait time (Tr), set in the **Value** Field a monitor time (0 to 99) from recognition of a receive command to reception of the first byte of data.
   For receive finish time (Tfr), set in the **Value** Field a monitor time (0 to 99) from reception of the first byte of the data to the last byte of the data.
   For send finish time (Tfs), set in the **Value** Field a monitor time (0 to 99) from the transmission of the first byte of the data to the last byte of the data.
3. Set a time unit in the **Time Unit** Field.
4. Select the **OK** Button to accept the settings or the **Cancel** Button to leave the settings unchanged.

   Note The receive wait time (Tr) and receive finish time (Tfr) cannot be set alone.

Monitor Time Ranges

The following table lists the units and ranges of monitor times that can be set.

Values	Time unit
00 to 99	0.01 s (10 ms)
00 to 99	0.1 s (100 ms)
00 to 99	1 s
00 to 99	1 m

Note Monitoring will not be performed if “00” is input as the value.

7-2 Editing Sequences

7-2-1 Displaying a Sequence List

Use one of the following procedures to display a sequence list within a protocol.

- Double-click the **Protocol List** Icon in the project workspace and then left-click the protocol to display the sequence list in the project window.
- Double-click the **Protocol** Icon that includes the desired sequence to display all the sequences within the protocol.

7-2-2 Renaming Sequences

Use the following procedure to rename a sequence that has been registered.

Note Sequences belonging to the **System** type protocols cannot be renamed.

1,2,3...

1. Left-click an appropriate **Communication Sequence** or select an appropriate **Communication Sequence** and press the **Enter** Key. The current sequence name will become editable.
2. Type in a new name for the sequence and press the **Enter** Key. It is possible to select and overwrite a portion of the current sequence name. The new sequence name may not exceed 30 characters.

7-2-3 Changing an Existing Sequence Number

1,2,3...

1. Left-click the **#** Field within the sequence or select the **#** Field and press the **Enter** Key. The current sequence number will become editable.
2. Type in a new sequence number and press the **Enter** Key. It is possible to select and overwrite a portion of the current sequence number. The new sequence number must be within the **Start Sequence** and **End Sequence** and also different from those currently used.

7-2-4 Copying/Pasting Sequences

Sequences can be copied between protocols or within a protocol. Use the following procedure to copy a sequence.

1,2,3...

1. Select a sequence to be copied. More than one sequence can be selected by pressing the **Shift** Key and selecting another sequence to extend the selection or by pressing the **Ctrl** Key and selecting another sequence to add to the selection.

2. Select the **Copy** Icon from the toolbar or press the **Ctrl**+**C** Keys. Alternatively, right-click to display the pop-up menu and select **Copy** from the menu. It can also be selected from the **Edit** Menu.
3. Select a protocol or display the sequence list in the project window where the copied sequence is pasted.

4. Select the **Paste** Icon from the toolbar or press **Ctrl**+**V** Keys. Alternatively, right-click to display the pop-up menu and select **Paste** from the menu. It can also be selected from the **Edit** Menu.
   The pasted sequences inherit the sequence numbers that existed before being copied. If the sequence number already exists or if the number is outside the sequence number range, the next available sequence number will be newly given to the pasted sequence.

7-2-5 Deleting Sequences

Use the following procedure to delete a sequence.

Note Sequences belonging to the **System** protocols cannot be deleted.

1,2,3...

1. Select a sequence to be deleted. More than one sequence can be selected by pressing the **Shift** Key and selecting another sequence to extend the selection or by pressing the **Ctrl** Key and selecting another sequence to add to the selection.

2. Left-click the **Delete** Icon on the toolbar or press the **Delete** Key. Alternatively, right-click, and select **Delete** from the pop-up menu. It can also be selected from the **Edit** Menu. A sequence can also be deleted by selecting the **Cut** Icon on the toolbar or pressing the **Ctrl**+**X** Keys. It can also be selected from the **Edit** Menu. Alternatively, right-click to display the pop-up menu and select **Cut** from the menu.
   To undo the last delete action processed using the Cut operation, left-click the **Paste** Icon on the toolbar or press the **Ctrl**+**V** Keys. Alternatively, right-click to display the edit pop-up menu and select **Paste**. The pasted sequences inherit the sequence numbers existed before being cut. If the sequence number already exists or if the number is outside the sequence number range, the next available sequence number will be newly given to the pasted sequence.

SECTION 8
Step Setting and Editing

This section describes details of the setting and editing of steps.

8-1 Step Setting 230
8-1-1 Step Setting Screen 230
8-1-2 Setting the Attributes 230
8-2 Step Editing 236
8-2-1 Displaying the Step List 236
8-2-2 Moving the Steps 236
8-2-3 Deleting the Steps 237
8-2-4 Copying the Steps 237

8-1 Step Setting

This section describes procedure for setting steps with the CX-Protocol.

8-1-1 Step Setting Screen

For details about settings, refer to *3-3 Step Attributes*.

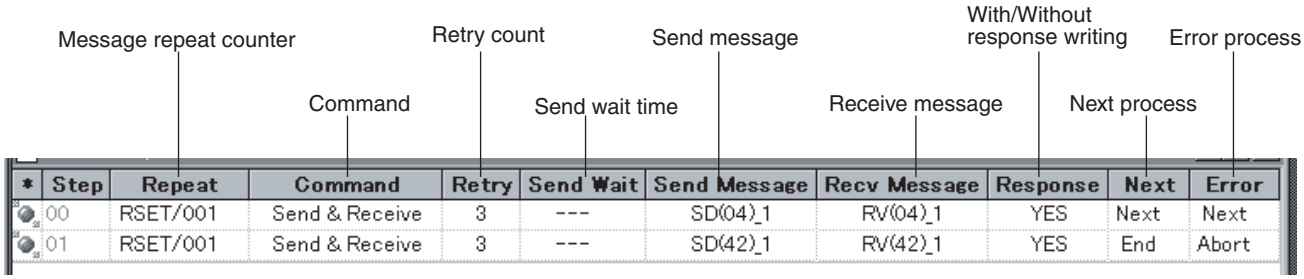

8-1-2 Setting the Attributes

The following table shows step attributes that can be set using the CX-Protocol.

Attribute	Content	
Repeat	Type	Reset / Hold (Reserve)
	Counter	Constant (1 to 255)
		Channel (word)
Command	Send, Receive, Send & Receive, Open*2, Close*2, Flush*2, Wait*2	
Retry	0 to 9	
Send Wait Time (Ts)	Value	00 to 99
	Time Unit	0.01s, 0.1s, 1s, 1 min
Send Message	Refer to *9-1 Creating Messages.*	
Receive Message	Refer to *9-1 Creating Messages.*	
Response	Yes*1, No	
Next	End*1, Next, Goto, Abort	
Error	End, Next, Goto, Abort*1	

Note
1. Default settings with the CX-Protocol.
2. For the CS/CJ protocol macro.

Message Repeat Counter

Set the number of times the step is to be repeated. The count can be set by entering a constant (1 to 255) or by designating the address of a word. When a constant is set in the repeat counter, the value of counter N will be incremented whenever the step is executed. The **Type** includes **Reset** and **Hold** and the **Counter** includes **Constant** or **Channel**.

1,2,3...

1. Left-click the **Repeat Counter** Field and then left-click the **Enter** Button or press the **Enter** Key.
   The **Repeat Counter Information** Dialog Box will be displayed.

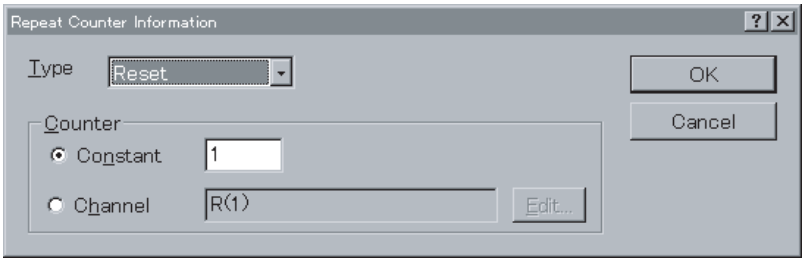

2. Set the initial value for the repeat counter N in the **Type** drop-down list.

   If the **Reset** is selected, the step is executed the designated number of times after the value of counter N will be initialized to 0.

   If the **Hold** is selected, the step will be executed the designated number of times while retaining the current value of the counter N.

3. To designate a repeat counter, select the **Constant** Button and enter the number of times (1 to 255) the step is to be repeated in the **Constant** Field.

   To designate a word (channel) to be read, select the **Channel** Button and select the **Edit...** Button to set the word address.
   The **Channel** Dialog Box will be displayed.

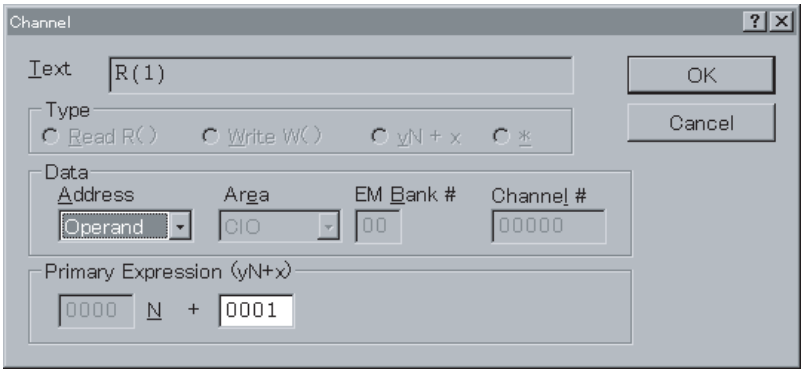

   Select the address type (**Channel**, **I1**, **I2**, **O1**, **O2**, or **Operand) from** the drop-down list.
   If **Channel** is selected as the address type, select an area (**CIO**, **WR** (CS/CJ only), **LR** (C200HX/HG/HE only), **HR**, **AR**, **DM** or **EMxx**) from the **Area** drop-down list.
   Input a value in the **Channel #.**

   Note If **EMxx** is selected from the **Area** drop-down list, be sure to input a bank number in the **EM Bank #** Field. The maximum value that can be input in the **EM Bank #** Field varies depending on the PLC used.

   The parameters for the **Primary Expression (yN+x)** Fields define the channel offset. Input the parameter x.

   Change the settings as necessary, provided in the following, and select the **OK** Button to accept the settings from the **Channel** Dialog Box, or the **Cancel** Button to leave the settings unchanged.

4. Select the **OK** Button to accept the settings from the **Channel** Dialog Box or the **Cancel** Button to leave the settings unchanged.

Command

Set one of the following commands for step execution.

Send

Sends the send messages set in the step.

Receive

Receives the receive messages that were set in the step or messages that were sent based on the receive matrix.

Send & Receive

After sending the send messages that were set in the step, receives the receive messages that are set in the step and the messages that were sent based on the receive matrix.

Open (for CS/CJ protocol macro)

Turns ON the DTR signal.

Close (for CS/CJ protocol macro)

Turns OFF the DTR signal.

Flush (for CS/CJ protocol macro)

Clears the data within the receive buffer.

Wait (for CS/CJ protocol macro)

Sets to a standby state in the step and keeps that state until the Wait Clear switch turns from OFF to ON.

The following table lists the items that can be set for each command.

Setting item		Command						
		Send	**Receive**	**Send & Receive**	**Open**	**Close**	**Flush**	**Wait**
Sequence	Transmission control	Yes	Yes	Yes	---	---	---	---
	Link words	Yes	Yes	Yes	---	---	---	---
	Receive wait time: Tr	---	Yes	Yes	---	---	---	---
	Receive finish time: Tfr	---	Yes	Yes	---	---	---	---
	Send finish time: Tfs	Yes	---	Yes	---	---	---	---
	Response Type	---	Yes	Yes	---	---	---	---
Step	Repeat counter	Yes	Yes	Yes	No	No	No	No
	Retry count	No	No	Yes	No	No	No	No
	Send wait time	Yes	No	Yes	No	No	No	No
	Send messages	Yes	No	Yes	No	No	No	No
	Receive messages	No	Yes	Yes	No	No	No	No
	With/Without response writing	Yes	Yes	Yes	No	No	No	No
	Next process	Yes	Yes	Yes	Yes	Yes	Yes	Yes
	Error process	Yes	Yes	Yes	No	No	No	No

1,2,3... 1. Left-click the **Command** Field.

Example: CS/CJ

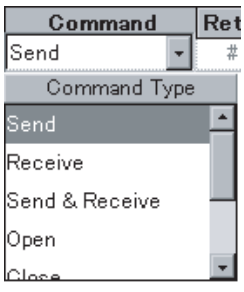

2. Left-click an appropriate command on the drop-down list.

Retry Count

The retry can only be set when the command is set to **Send&Receive**. When the retry occurs, the current step will be executed again. If the retry occurs again after the step is repeated the number of designated times, a processing error will occur.

Effective retry factor: 0 to 9 (0: Retry will not be executed.)

Retry Factors

- The send finish time has been reached.
- The receive wait time has been reached.
- The receive finish time has been reached.
- A transmission error occurred during receive processing.

  For the CS/CJ: Transmission error of the following address causes a retry.
  - Serial Communications Board: Bit 15 of word 1908 or 1918
  - Serial Communications Unit: Bit 15 of word n+8 or n+18 (n = 1500 + 25 x Unit No.)

  For the C200HX/HG/HE: The bit 04 of word 283 or bit 12 (communications error) of word 283 causes a retry.
- A message, excepting the message set in receive messages, is received.
- An error occurred in the Error Check code.

Note For retries, send processing is executed regardless of the wait time.

1,2,3...

1. Left-click on the **Retry** Field or select the **Retry** Field and press the **Enter** Key.
2. Input the number of retries (0 to 9) and press the **Enter** Key.

Send Wait Time: Ts

Sets the time to be waited until a send message is sent for send processing. The accuracy of the Ts is 10 ms maximum.

The send wait time setting range is from 0 to 99 (0: No wait time). The setting unit can be selected from the following four units.

Time unit	Value
10 ms (0.01 s)	00 to 99
100 ms (0.1 s)	00 to 99
1 s	00 to 99
1 min	00 to 99

Note When 00 is set as the value, waiting will not occur.

1,2,3...

1. Left-click the **Send Wait** setting for the step and then left-click the **Enter** Button or press the **Enter** Key.
   The **Transmission Wait Time (Ts)** Dialog Box will be displayed.

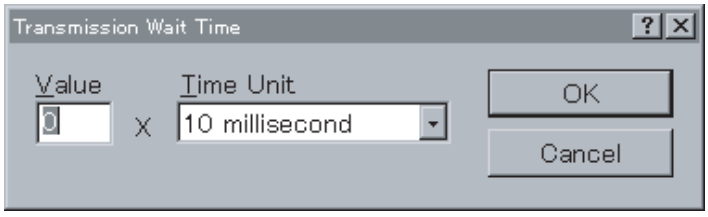

2. Enter a value for the wait time in the **Value** Field.
3. Enter a time unit in the **Time Unit** Field.
4. Select the **OK** Button to accept the settings or the **Cancel** Button to leave the settings unchanged.

Setting the Send /Receive Message

Send/Receive Message and Receive Matrix

If a send message, receive message, or receive matrix has already been created in the send/receive message list or the receive matrix list, a message or receive matrix can be selected from the **Send/Receive Message** Field of the step.

Use the following procedure to select a send message reference for the step.

1,2,3...

1. Left-click on the **Send Message** or **Receive Message** Field.

Example:
Setting screen for a receive message

2. Left-click a desired send message name, receive message name, or receive matrix on the drop-down list.

Note Select the receive matrix from the **Receive Message** Field. The receive matrix name is indicated with brackets (< >).

Creating Send/Receive Messages

A send message or receive message can be newly created in the **Send Message/Receive Message** Field of the step even when the messages are not created in the send message/receive message list.
Use the following procedure to create a send message or receive message.

1,2,3...

1. Right-click the **Send Message** or **Receive Message** Field of the step to display a pop-up menu. Select **New Message** from the menu.
2. The **Message Editor** Dialog Box will be displayed. Input a message name in the **Name** Field.
3. Refer to *9-1 Creating Messages* for creating messages.
4. Left-click the **OK** Button to accept the settings or left-click the **Cancel** Button to leave the settings unchanged.

Note The receive matrix cannot be newly created or monitored in the **Receive Message** Field of the step. It can be created or monitored only in the receive matrix list.

Editing Send/Receive Message in Send/Receive Field

The send message or receive message can be edited in the **Send Message/ Receive Message** Field of the step.

Use the following procedure to edit the messages.

1,2,3...

1. Right-click the **Send Message** or **Receive Message** Field of the step to display a pop-up menu. Select **Edit Message** from the menu.
2. The **Message Editor** Dialog Box will be displayed. Refer to *9-1 Creating Messages* for editing messages.
3. Left-click the **OK** Button to accept the settings or left-click the **Cancel** Button to leave the settings unchanged.

With/Without Response Writing

Sets whether received data is to be stored in the I/O memory area of the PLC. This setting is valid only when received data is stored by the fourth operand (for the CS/CJ-series) or third operand (for the C200HX/HG/HE) of the PMCR instruction.

- Response: Yes
  Received data is stored in the I/O memory area of the PLC. A response type must be set in the sequence list attributes.
- Response: No
  Received data is Read-only (not stored in the I/O memory).

1,2,3...

1. Left-click the **Response** Field of the step.

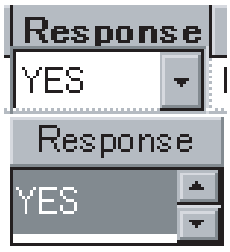

2. Left-click either **Yes** or **No** on the drop-down list.

Next Process

Use the following procedure to set the next step to be executed.

If a receive matrix is set for the receive message, control will be passed to the next step based on the next process set in the receive matrix.

The following four processes can be set.

Next process	Processing details
Goto **	When this step is terminated, control will be passed to the step number designated in **.
Next	When this step is terminated, the next step will be executed.
End	When this step is terminated, the sequence will be terminated.
Abort	When this step is terminated, the step will be aborted and the sequence will be terminated.

1,2,3...

1. Left-click the **Next Process** Field of the step and left-click the **Enter** Button or press the **Enter** Key.
   The **Next Process** Dialog Box will be displayed.

2. Select Next Process from the **Jump** Field. When **Goto** is selected, input a step number in the empty field.

3. Select the **OK** Button to accept the settings or the **Cancel** Button to leave the settings unchanged.

Error Process

When the step is terminated abnormally, use the following procedure to set the next step to be executed. When a step is terminated normally, control will be passed to the next step according to the next process settings.

If a receive matrix is set in a receive message, control will be passed to the next step according to the setting that determines the error processing in the event of abnormal termination.

The following four processes can be set.

Error process	Processing details
Goto **	When this step is abnormally terminated, control will be passed to the step number designated in **.
Next	When this step is abnormally terminated, the next step will be executed.
End	When this step is abnormally terminated, the sequence will be terminated.
Abort	When this step is abnormally terminated, the step will be aborted and the sequence will be terminated.

1,2,3...

1. Left-click the **Error Process** Field of the step and then left-click the **Enter** Button or press the **Enter** Key.
   The **Error Process** Dialog Box will be displayed. The display is the same as the one for the next process.
2. Select Next Process from the **Jump** Field. When **Goto** is selected, input a step number in the empty field.
3. Select the **OK** Button to accept the settings or the **Cancel** Button to leave the settings unchanged.

8-2 Step Editing

8-2-1 Displaying the Step List

Use one of the following procedures to display the step of the sequence.

- Double-click the **Protocol** Icon in the project workspace and then left-click a desired sequence for displaying the step. The step will be displayed in the project window.

- Double-click the **Sequence** Icon that includes the step in the project window to display the step list that contains all the steps within the sequence.

8-2-2 Moving the Steps

The order of steps can be changed by moving the selected step. Use the following icons to reorder the steps.

Note Steps within the **System** protocols cannot be edited.

1,2,3...

1. Select a step and use the **Up** Icon on the toolbar to move up the step by level. It can also be moved by selecting the **Move** from the pop-up menu that can be displayed by right-clicking.

2. Select a step and use the **Down** Icon on the toolbar to move down the step by level. It can also be moved by selecting the **Move** from the pop-up menu that can be displayed by right-clicking.

3. Select a step and use the **Top** Icon on the toolbar to move the step to the top level. It can also be moved by selecting the **Move** from the pop-up menu that can be displayed by right-clicking.

4. Select a step and use the **Bottom** Icon on the toolbar to move the step to the bottom level. It can also be moved by selecting the **Move** from the pop-up menu that can be displayed by right-clicking.

8-2-3 Deleting the Steps

Use the following procedure to delete the steps.

Note Steps within the **System** protocols cannot be deleted.

1,2,3...

1. Left-click the icon of the step to be deleted. More than one step can be selected by pressing the **Shift** Key and selecting another step to extend the selection or by pressing the **Ctrl** Key and selecting another step to add to the selection.

2. Left-click the **Delete** Icon on the toolbar or press the **Delete** Key. Alternatively, right-click and select **Delete** from the pop-up menu. **Delete** can also be selected from the **Edit** Menu. The step can also be deleted by left-clicking the **Cut** Icon on the toolbar or by pressing the **Ctrl**+**X** Keys. Alternatively, right-click to display the pop-up menu and select **Cut** from the menu. **Cut** can also be selected from the **Edit** Menu.
   When canceling the last deletion using **Cut**, left-click the **Paste** Icon on the toolbar or press the **Ctrl**+**V** Keys. Alternatively, right-click to display the pop-up menu and select **Paste** from the menu. **Paste** can also be selected from the **Edit** Menu.
   The pasted step will be positioned at the end of the sequence and the next step number available will be given to that step.
   If another object is copied or cut during the above procedure, the originally cut object will be lost.

Note Once a step has been deleted, it cannot be recovered.

8-2-4 Copying the Steps

Use the following procedure to copy the steps within the step field or between the sequences.

1,2,3...

1. Left-click the icon of the step to be copied. More than one step can be selected by pressing the **Shift** Key and selecting another step to extend the selection or by pressing the **Ctrl** Key and selecting another step to add to the selection.

2. Left-click the **Copy** Icon on the toolbar or press the **Ctrl+C** Keys. Alternatively, right-click to display the pop-up menu and select **Copy** from the menu. It can also be selected from the **Edit** Menu.
3. Select the sequence or display in the project window the step list where the copied step is to be pasted.

4. Left-click the **Paste** Icon on the toolbar or press the **Ctrl**+**V** Keys. Alternatively, right-click to display the pop-up menu and select **Paste** from the menu. It can also be selected from the **Edit** Menu. The pasted step will be positioned at the end of the sequence and the next step number available will be given to that step.

SECTION 9
Setting and Editing Messages and Matrix Lists

This section describes details of the setting and editing of messages and matrix lists.

9-1 Creating Messages 240
9-1-1 Creating a New Message 240
9-1-2 Message Setting Screen 241
9-1-3 Contents of Messages. 241
9-2 Matrix Creation 254
9-2-1 Creating a New Matrix. 254
9-2-2 Creating a New Matrix Case 254
9-2-3 Editing a Message in the Matrix Case 255
9-2-4 Defining the Next Matrix Case Process. 255
9-3 Message and Matrix Editing. 255
9-3-1 Displaying Messages within the Protocol 255
9-3-2 Renaming a Message 255
9-3-3 Copying a Message 256
9-3-4 Deleting a Message 256
9-3-5 Displaying the Matrix within the Protocol. 256
9-3-6 Displaying the Matrix Case within the Matrix. 257
9-3-7 Copying the Matrix Case 257
9-3-8 Moving the Matrix Case. 257

9-1 Creating Messages

9-1-1 Creating a New Message

Use either of the following procedures to create a new message.

1,2,3...

1. Right-click the **Send Message** or **Receive Message** Field in the step list, and select **New Message** from the pop-up menu, when the **Message Editor** Dialog Box will be displayed. Specify each input item and order in the dialog box.
2. Create the new message in the message list independently from the steps and input each item in either of the following method.
   a) Input the data for each item field beginning with the header. Specify and input the order and items of the data in the data field.
   b) Display the **Message Editor** Dialog Box from the data field. Specify and input the order and items of the order in the dialog box.

Creating a New Message in *Send Message* or *Receive Message* Field for a Step

Use the following procedure to create a new message for a step.

1,2,3...

1. Right-click the **Send Message** or **Receive Message** Field for a step and select **New Message** from pop-up menu.
2. The **Message Editor** Menu Dialog Box will be displayed. Input the message name in the **Name** Field.

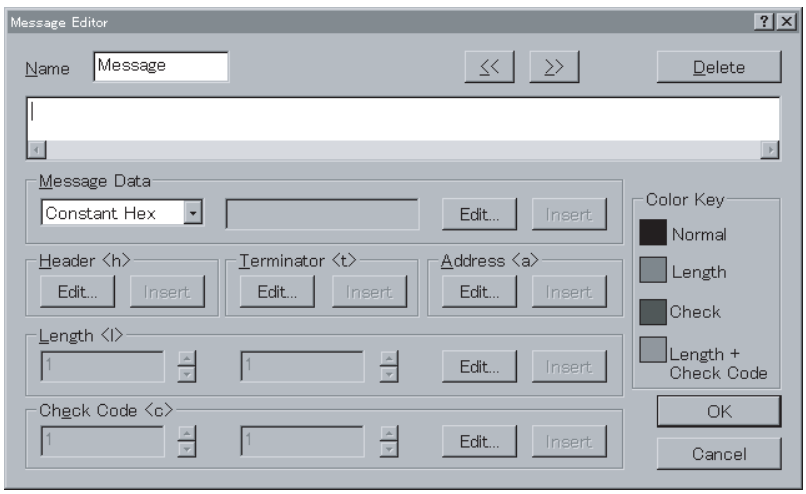

3. Create the message as appropriate. Refer to *9-1 Creating Messages* for details on how to construct a message.
4. Left-click the **OK** Button to accept the settings. Click the **Cancel** Button to leave the settings unchanged.

Creating a New Message from the Message List

Use the following procedure to create a new message from the message list.

1,2,3...

1. Double-click the **Protocol** Icon in the project workspace and select and highlight the receive message or send message list. Alternatively, double-click the **Receive Message List** Icon or **Send Message List** Icon in the project window.

2. Select the send message or receive message references by right-clicking the **Send Message List** Icon in the project workspace. Alternatively, select the **Create** from the pop-up menu in the project window and select the send message or receive message references or select the send message or receive message references from the **Protocol** Menu.

*	Send Message	Header <h>	Terminator <t>	Check code <c>	Length <l>	Address <a>	Data
	Message						

3. Left-click **Data** and left-click the **Enter** Button or press the **Enter** Key. The **Message Editor** Menu Dialog Box will be displayed. For details of how to create a message, refer to *9-1 Creating Messages*.

9-1-2 Message Setting Screen

For details about message settings, refer to *3-4 Communication Message Attributes.*

Header	Address	Length	Data	Check code	Terminator

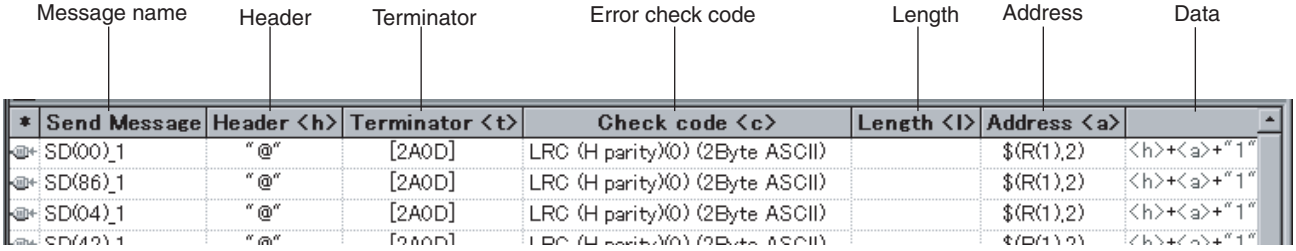

9-1-3 Contents of Messages

The settings that can be made for messages using the CX-Protocol are shown in the following table.

Attribute	Content	
Header <h>	Type	None, Code, ASCII, Hexadecimal
	Data	One of Code, ASCII, or Hexadecimal
Terminator <t>	Type	None, Code, ASCII, Hexadecimal
	Data	One of ASCII, Hexadecimal, or Variable
Check Code <c>	Type	None, LRC, LRC2*1, CRC-CCITT, CRC-16, SUM (1 byte), SUM (2 bytes), SUM1 (1 byte)*1, SUM1 (2 bytes)*1, SUM2 (1 byte), SUM2 (2 bytes)
	Default	0 to 255 if Type is 1 byte; 0 to 65535 if Type is 2 bytes
	Conversion	Reverse Order
		Data Type: Binary, ASCII
Length <l>	Type	None, 1 byte, 2 bytes
	Default	0 to 255 if Type is 1 byte; 0 to 65535 if Type is 2 bytes
	Conversion	Binary, ASCII
Address <a>	Type	None, Constant, ASCII, Constant Hexadecimal, Variable, Variable ASCII, Variable Hexadecimal, Variable (Reverse), Variable ASCII (Reverse), Variable Hexadecimal (Reverse)
	Data	One of ASCII, Hexadecimal, or Variable
Data	Message Order	Order setting: <h>, <t>, <c>, <l>, <a>
	Type/data	Data (code, ASCII, Hexadecimal, Variables)

Note *1: For the CS/CJ protocol macro only.

Use either one of the following procedures to create a message.

- Set each attribute (header, terminator, error check code, address) using its respective setting screen and display the **Message Editor** Dialog Box from the **Data** Field to edit the message.
  Data can be created only in the **Message Editor** Dialog Box.

  Example: <h>+<a>+----+<c>+<t> Edit the following order using the dialog box.
  Input data from this dialog box.

- Display the **Message Editor** Dialog Box from the **Data** Field, and perform all the settings (header, terminator, error check code, address) from there, before editing.

Header <h>

Use the following procedure to set the header (data that indicates the beginning of the message). Select one of the following data types: ASCII, Hexadecimal, or Code.

1,2,3...

1. Left-click the **Header <h>** Field and then left-click the **Enter** Button or press the **Enter** Key. The **Header <h>** Dialog Box will be displayed.

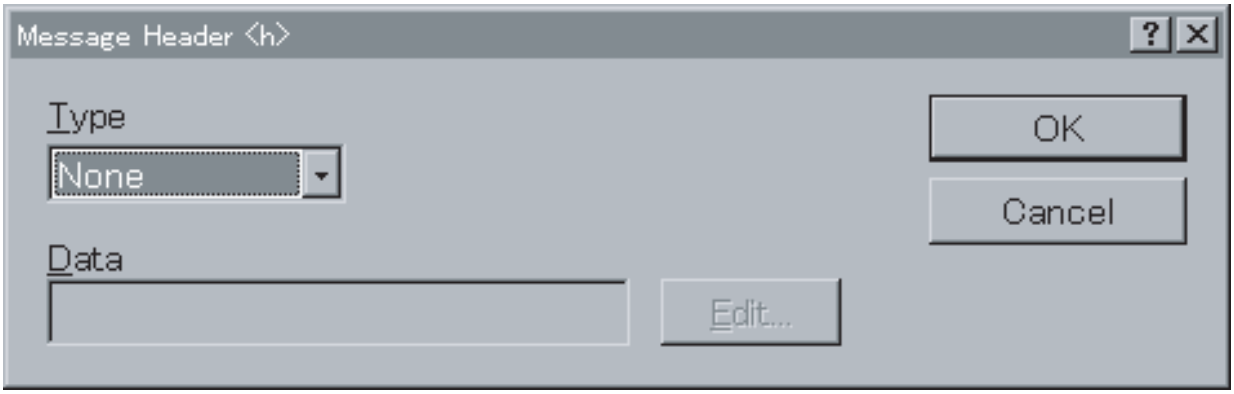

Select a header type from the **Type** drop-down list (refer to Code, ASCII, and Hexadecimal in the following section) and set the **Data** Field.

This dialog box can also be displayed by left-clicking the **Data** Field and then left-clicking the **Enter** Button or pressing the **Enter** Key to display the **Message Editor** Dialog Box, where the **Header <h>** Dialog Box can be displayed by left-clicking the **Edit** Button in the **Header <h>** Field.

2. Left-click the **OK** Button to accept the settings or the **Cancel** Button to leave the settings unchanged.

None

If **None** is selected from the **Type** drop-down list, no data will be set to a header.

Code

1,2,3...

1. Select **Code** from the **Type** drop-down list.
2. Left-click the **Edit** Button. The **Code Entry** Dialog Box will be displayed.

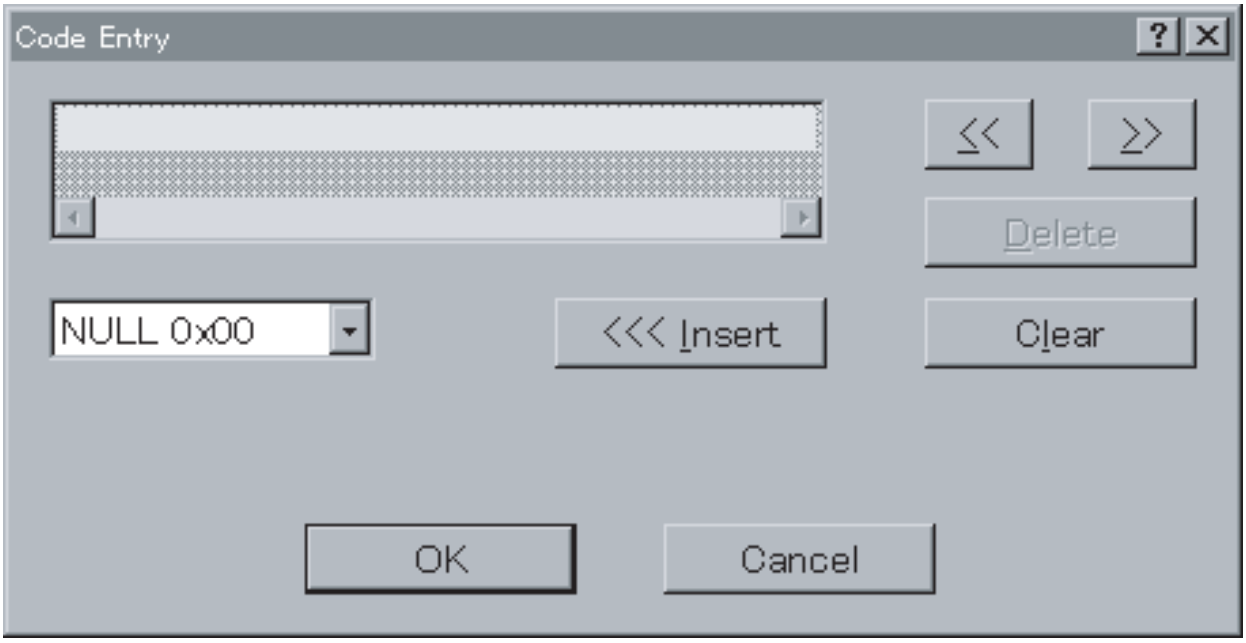

3. Select **Special Code**. Up to four special codes may be entered. Select the codes from the drop-down list and left-click the **Insert** Button to input the code indicated.

   Note Five or more special codes cannot be input. Left-click the **Clear** Button to clear all the special codes and input them again from the beginning. Left-click the **Delete** Button to delete the special code where the cursor is located. Left-click the **<<** or **>>** Button to move the cursor position.

4. Left-click the **OK** Button to accept the special codes entered or the **Cancel** Button to leave the settings unchanged.
   The input code that is set will be displayed in the **Data** Field of the **Header <h>** Dialog Box.

ASCII

1,2,3...

1. Select **ASCII** from the **Type** drop-down list.
2. Input ASCII characters (maximum of 4 characters) in the **Data** Field. The input ASCII characters will be displayed with a prefix "[" and suffix "]" in the message header field. For example, if "@" is input, "[@]" will be displayed.

Hexadecimal

1,2,3...

1. Select **HEX** from the **Type** drop-down list.
2. Left-click the **Edit** Button. The **Hex Entry** Dialog Box will be displayed.

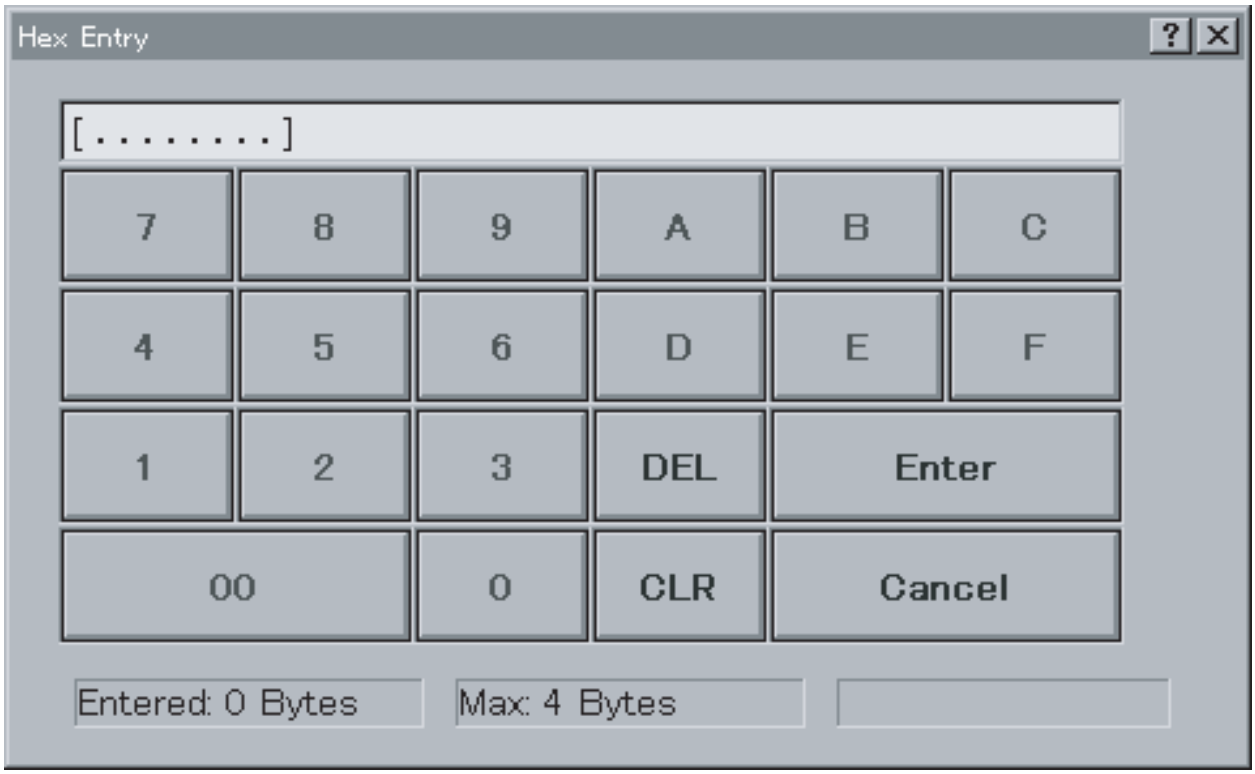

3. Input the required hexadecimal value by left-clicking the button for each digit of that value. Up to eight digits may be entered, and they are displayed at the top of the dialog box. (If a ninth digit is entered, the first digit will be deleted.)

   Note Left-click the **CLR** Button to clear all codes and start again. Left-click the **DEL** Button to delete the last code entered.

4. Left-click the **Enter** Button to accept the settings or the **Cancel** Button to leave the settings unchanged.
   The input code confirmed by left-clicking the **Enter** Button will be displayed in the **Data** Field of the **Header <h>** Dialog Box.
   The input code will be displayed with a prefix "[" and suffix "]" in the data field. For example, if 2A0D is input, "[2A0D]" will be displayed.

Terminator <t>

Use the following procedure to set the terminator (data that indicates the end of the message). Select one of the following data types: ASCII, Hexadecimal, or Code.

1,2,3...

1. Left-click the **Terminator <t>** Field and then left-click the **Enter** Button or press the **Enter** Key. The **Message Terminator <t>** Dialog Box will be displayed.
   The dialog box can also be displayed from the **Message Editor** Dialog Box. (Refer to the previous *Header <h>* section.)

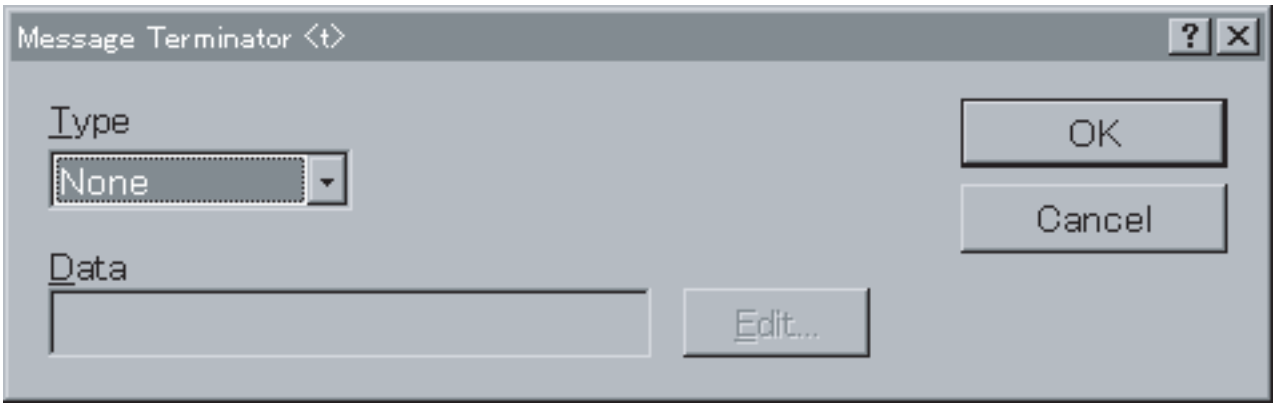

Select a terminator type from the **Type** drop-down list and set the **Data** Field. (For inputting the Code, ASCII, or Hexadecimal, refer to the previous *Header <h>* section.)

2. Left-click the **OK** Button to accept the settings or the **Cancel** Button to leave the settings unchanged.

Check Code <c>

Use the following procedure to designate an error check code calculation method. The check code types LRC, LRC2[*1], CRC-CCITT, CRC-16, SUM (1 byte), SUM (2 bytes), SUM1 (1 byte)[*1], SUM1 (2 bytes)[*1], SUM2 (1 byte), and SUM2 (2 bytes) are available. Data types available are binary and ASCII. Initial values and conversion directions can be designated.

Note Only for the CS/CJ protocol macro.

1,2,3...

1. Left-click the **Check code <c>** Field and then left-click the **Enter** Button or press the **Enter** Key. The **Message Check Code <c>** Dialog Box will be displayed.
   The dialog box can also be displayed from the **Message Editor** Dialog Box. (Refer to the previous *Header <h>* section.)

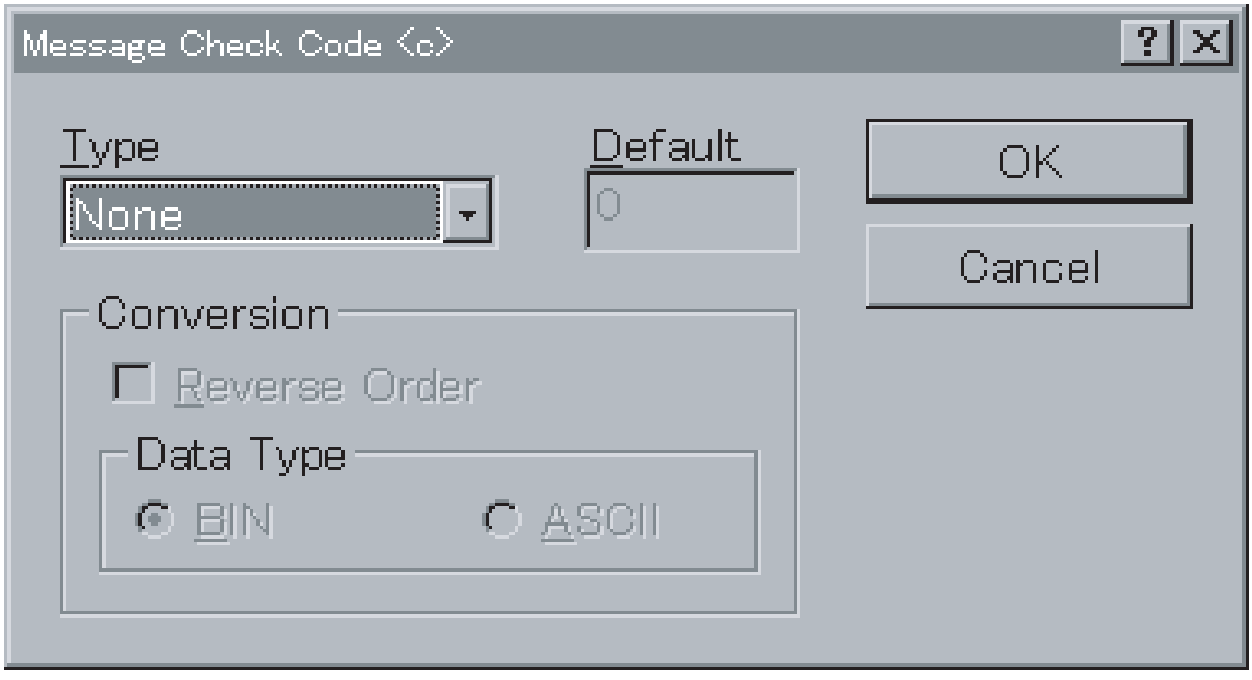

Select a check code type from the **Type** drop-down list.
For LRC, LRC2, CRC-16, SUM (1 byte/2 bytes), SUM1 (1 byte/2 bytes),

and SUM2 (1 byte/2 bytes), all fields of the dialog box become active. For CRC-CCITT, the **Conversion** Field becomes active.

2. Input values in the **Default** Field.
   For LRC, LRC2, CRC-16, SUM (1 byte), SUM1 (1 byte), and SUM2 (1 byte), enter a default value from 0 to 255. For SUM (2 bytes), SUM1 (2 bytes), SUM2 (2 bytes), CRC-16, enter a default value from 0 to 65535.
3. Select the **Reverse Order** check box to set the reverse check code.
4. For all types other than **None**, set BIN or ASCII in the **Data Type** Field.
   For LRC, LRC2, SUM (1 byte), SUM1 (1 byte), and SUM2 (1 byte), BIN indicates binary data (1 byte) and ASCII indicates ASCII data (2 bytes).
   For CRC-CCITT, CRC-16, SUM (2 bytes), SUM1 (2 bytes), and SUM2 (2 bytes), BIN indicates binary data (2 bytes) and ASCII indicates ASCII data (4 bytes).
5. Left-click the **OK** Button to accept the settings or the **Cancel** Button to leave the settings unchanged.
   The display in the **Check Code** Field will be as shown below.

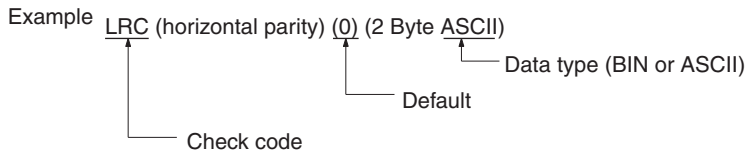

Note Set the calculation range of the error check code <c> in the **Data** Field of the **Message Editor** Dialog Box.

Length <l>

Use the following procedure to set the length (the number of bytes of the message). The data length is automatically calculated in send processing according to the **Length <l>** setting in a frame. The length <l> data will be added when data is sent. The **Length** types of 1 byte or 2 bytes are available and the **Conversion** types of BIN or ASCII are available.

1,2,3...

1. Left-click the **Length <l>** Field for a message and then left-click the **Enter** Button or press the **Enter** Key. The **Message Length <l>** Dialog Box will be displayed. The dialog box can also be displayed from the **Message Editor** Dialog Box. (Refer to the previous descriptions for the Header <h>.)

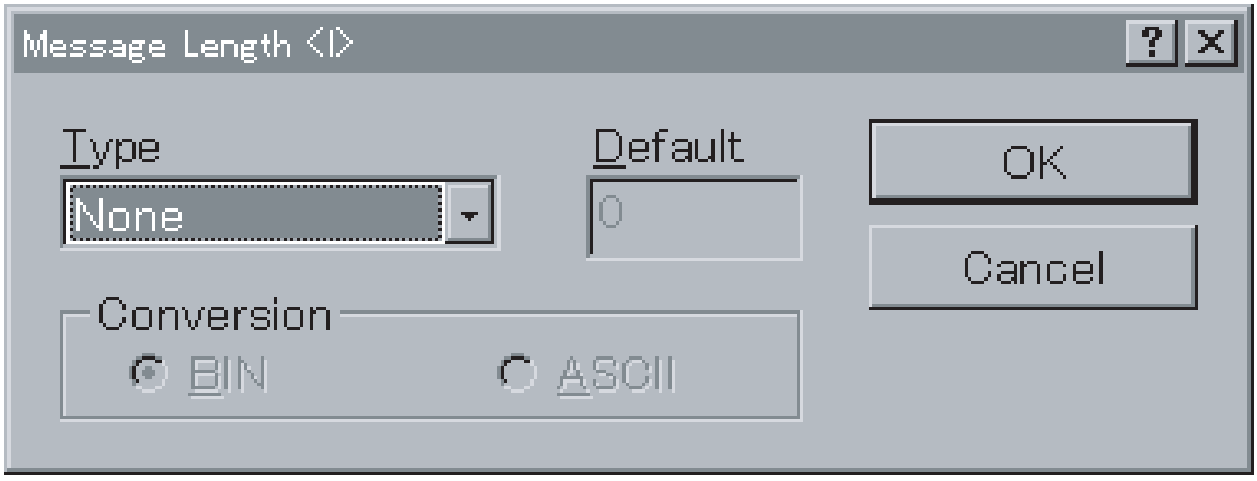

Select a length type from the **Size** drop-down list. For **1 Byte**, the length is set to one byte. For **2 Bytes**, the length is set to two bytes.

2. Enter the length in the **Default** Field. The range is 0 to 255 for **1 Byte** or 0 to 65535 for **2 Bytes**.

3. Select the **BIN** conversion type or **ASCII** conversion type from the **Conversion** Field.
4. Left-click the **OK** Button to accept the settings or the **Cancel** Button to leave the settings unchanged.

   Note The display in the **Length** Field will be as shown below.

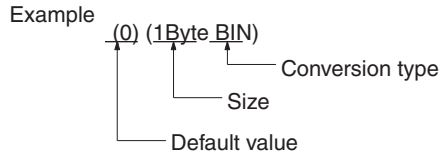

   Note Set the calculation range in the **Data** Field of the **Message Editor** Dialog Box.

Address <a>

Use the following procedure to set the address. The address types are as shown in the following table.

Type	Drop-down list item	Default format
Constants	Constant ASCII	
	Constant hexadecimal	[ ]
Variables	Variable	(1,1)
Variables	Variable ASCII (with ASCII conversion)	$(1,1)
Variables	Variable hexadecimal (with hexadecimal conversion)	&(1,1)
Variables	Variable (reverse)	~(1,1)
Variables	Variable ASCII (with reverse conversion)	$~(1,1)
Variables	Variable hexadecimal (with reverse conversion)	&~(1,1)

1,2,3...

1. Left-click the **Address <a>** Field and then left-click the **Enter** Button or press the **Enter** Key. The **Message Address <a>** Dialog Box will be displayed. The dialog box can also be displayed from the **Message Editor** Dialog Box. (Refer to the previous descriptions for the header <h>.)

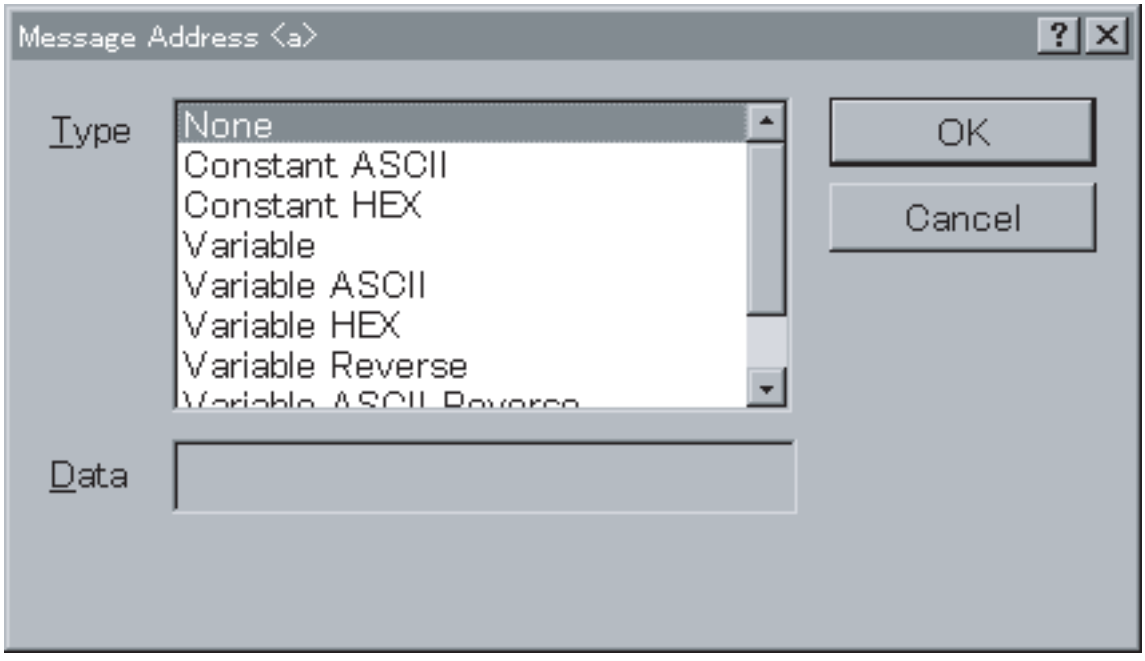

   Select an address type from the **Type** drop-down list.

2. For **Constant ASCII**, enter characters in the **Data** Field.

For **Constant HEX**, left-click the **HEX** Button to enter hexadecimal values into the **Data** Field.

Note For the input methods, refer to the previous descriptions for the header <h>.)

For the Variable types, left-click the **Variable** and **Length** Buttons to compose variables (X, Y). The **Channel** Dialog Box will be displayed.

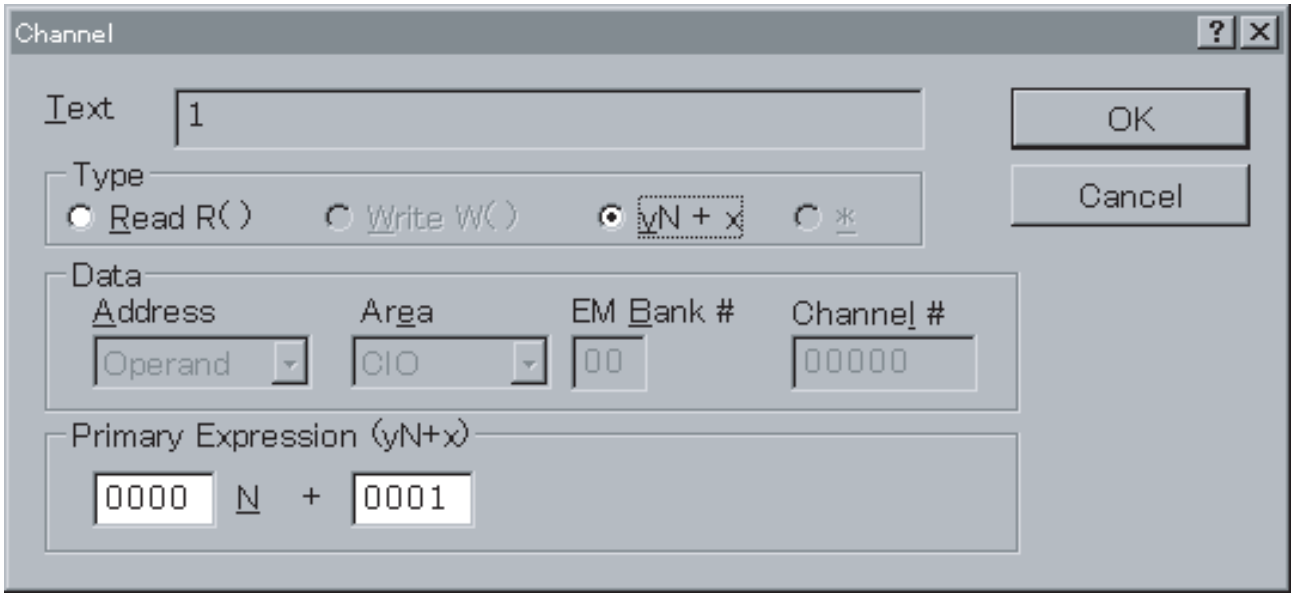

Setting of Variables

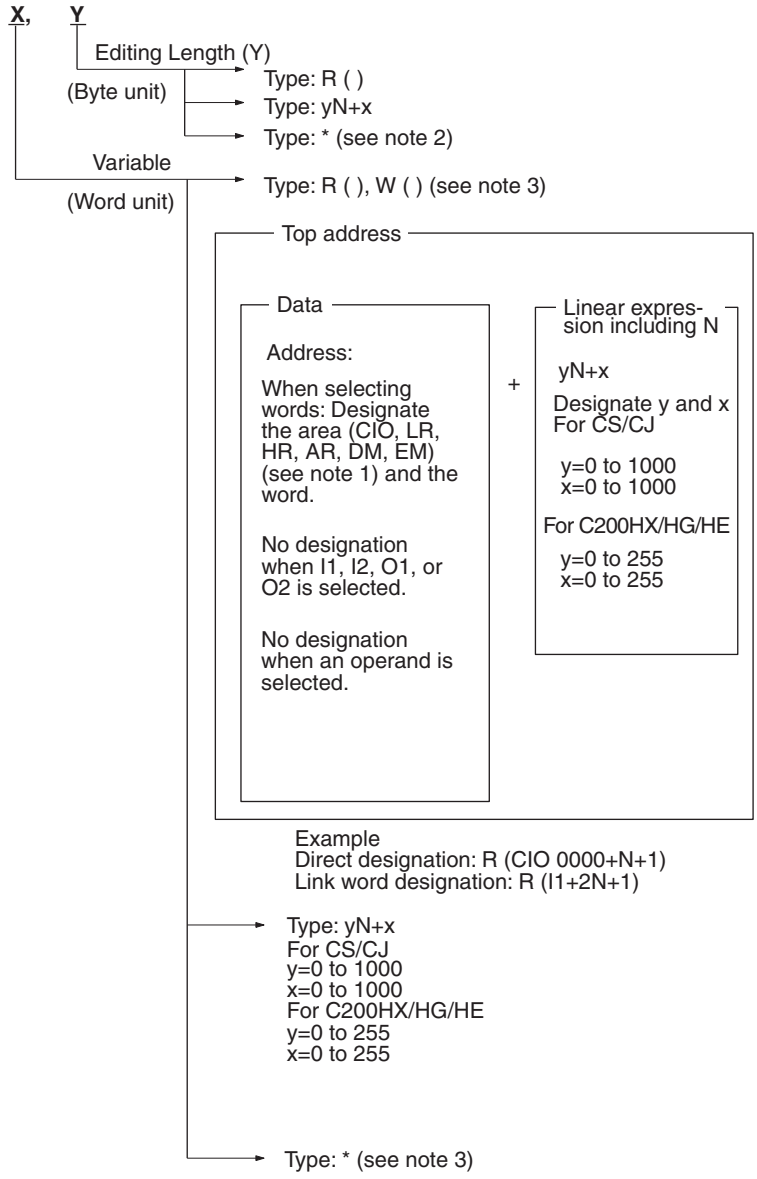

Note

1. Area codes for word designation
   - CIO: I/O relay, internal auxiliary relay, and special auxiliary relay
   - WR: Internal auxiliary relay (For CS/CJ only)
   - LR: Link relay (For C200HX/HG/HE only)
   - HR: Holding relay
   - AR: Auxiliary memory relay
   - DM: Data memory
   - EM: EM area
2. Cannot be selected in the address setting or send message.
3. Cannot be selected in the send message.

Setting **Channel** Dialog Box

a) Select **Read R ( )**, **Write W ( )**, **yN+x**, or ***** in the **Type** Field.

b) If **Read R ( )** or **Write ( )** is selected in the **Type** Field, select an variable (**Channel**, **I1**, **I2**, **O1**, **O2**, or **Operand**) from the **Address** drop-down list in the **Data** Field. If **Channel** is selected, select an area code (**CIO**, **WR, LR**, **HR**, **AR**, **DM** or **EMxx**) from the **Area** drop-down list. Set a value in the **Channel #** Field.

c) Designate an offset from the top word (designated in the above **Data** Field) in the **Primary Expression (yN+x)** Field. Input y and x.

d) Press the **OK** Button to confirm the **Channel** Dialog Box or **Cancel** Button to cancel the process.

Note If the **EMxx** option is selected from the **Area** drop-down list, be sure to input the bank number (0 to18 hex) in the **EM Bank #** Field. The maximum number of the EM bank that can be designated in the **EM Bank #** Field depends on the selected PLC.

⚠ **Caution** If you attempt to access EM banks 0D to 18 hex from any Unit other than the CJ1W-SCU22/32/42, a Data read/data write area exceeded error will occur in the protocol status. (This will occur even if EM banks 0D to 18 hex are supported by the CPU Unit.)

Address Setting Examples

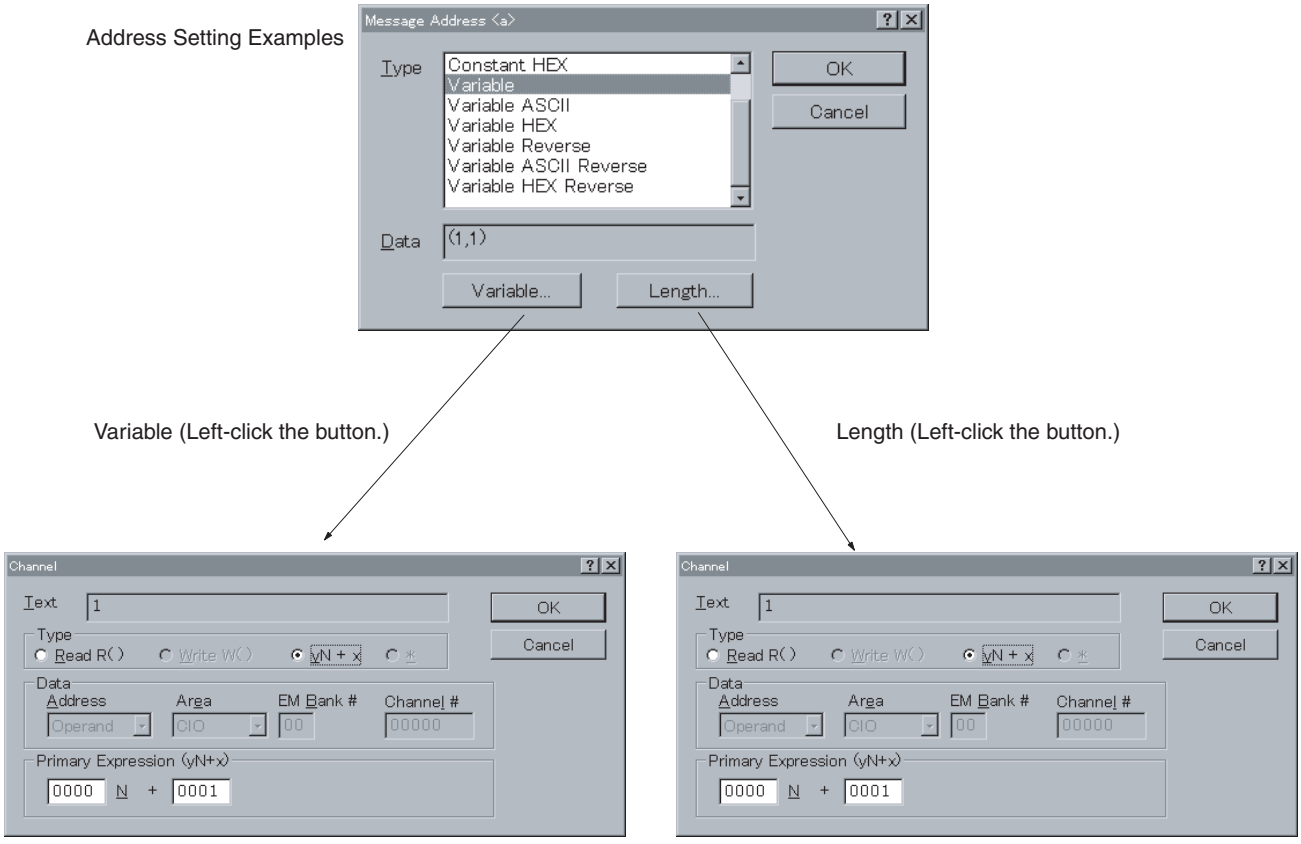

3. Press the **OK** Button to confirm the setting or **Cancel** Button to cancel the process.

Data Use the following procedure to edit the message.

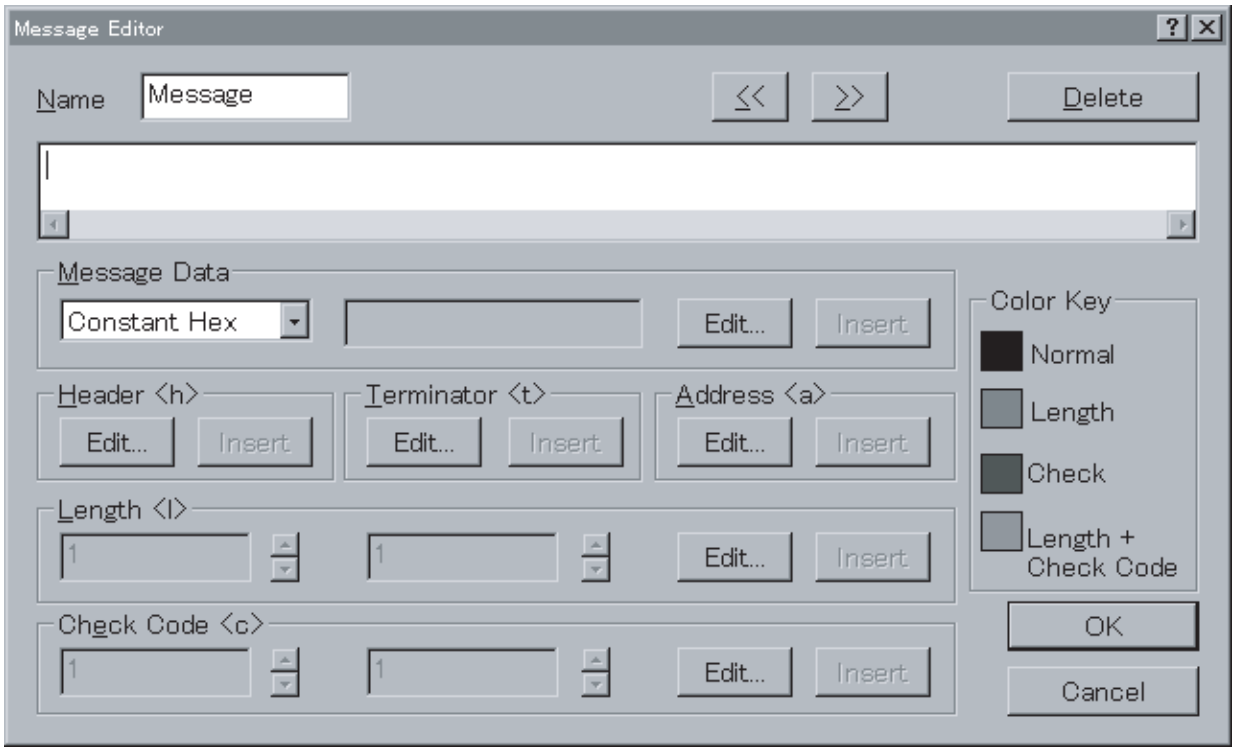

1,2,3... 1. Enter a message name.

2. Retrieve each item already set and reorder them.

Example: Edit the following in this dialog box.

<h>+<a>+••••••+<c>+<t>

Input data from this dialog box.

Note If data has not been input into any of the items (header <h>, address <a>, check code <c>, or terminator <t>), left-click the **Edit** Button of each field to display a data input dialog box and to enter data.
If data has been input in any one of these items, the **Insert** Button for each one of them will become active.

3. Set the data.
Combine the following to designate the data using the **Message Data** drop-down list.

Hexadecimal, ASCII, Code, Variable

Example: "RX0"+&(N,1)+"00"

ASCII data

Variable

ASCII data

4. Set the error check code and length calculation range (items). Items subject to calculation are shown in the following color in the **Data** Field.
Set as length calculation: Red
Set as check code calculation: Blue
Set as length and check code calculation: Purple

Use the following procedure to edit messages and to enter data.

1,2,3...

1. Left-click the **Data** Field for a message and then left-click the **Enter** Button or press the **Enter** Key. The **Message Editor** Dialog Box will be displayed. Using this dialog box, create data and edit messages.
2. Enter a message name in the **Name** Field.
3. Left-click the **Insert** Button on each field to insert data for each item. Message elements will be displayed from left to right in the screen field.

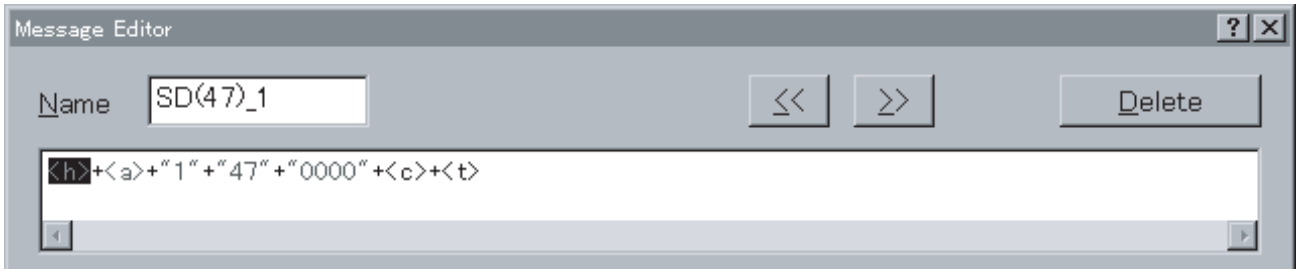

a) Left-click the **Insert** Button in the order of insertion. This item selected with the **Insert** Button will be inserted prior to the highlighted item. Use the **<<** or **>>** Button to move the cursor to left or right.
The header <h> can be inserted only at the beginning of a message.
For deleting an item, move the cursor using the **<<** or **>>** Button until it is over the item to be deleted and then left-click **Delete**.

Note a) <h>, <t>, <c>, <l>, or <a> can be deleted from the message configuration, not from the data. It can be inserted again by left-clicking the **Insert** Button.

b) As for <h>, <t>, <c>, <l>, and <a>, only one item can be positioned in one message.

A header can be inserted into a message by left-clicking the **Insert** Button on the **Header** Field. If a header already exists in a message or if the cursor is not at the beginning of the message, this button cannot be used.
If a header is to be inserted or if it needs to be modified, left-click the **Edit** Button to display the **Header <h>** Dialog Box and then enter or edit the header.

A terminator can be inserted into a message by left-clicking the **Insert** Button on the **Terminator** Field. If a terminator already exists in a message, this button cannot be used.
A terminator can be inserted before the check code unless there is data after the check code. If a terminator is to be inserted or if it needs to be modified, left-click the **Edit** Button to display the **Terminator <t>** Dialog Box and then enter or edit the terminator.

A check code can be inserted into a message by left-clicking the **Insert** Button on the **Check Code** Field. If a check code already exists or if an attempt is made to insert the check code before the header, this button cannot be used.
If a check code is to be inserted or if it needs to be modified, left-click the **Edit** Button to display the **Check Code <c>** Dialog Box and then enter or edit the check code.

An address can be inserted into a message by left-clicking the **Insert** Button on the **Address** Field. If an address already exists or if an attempt is made to insert the address before the header or after the terminator, this button cannot be used.
If an address is to be inserted or if it needs to be modified, left-click the

Edit Button to display the **Address <a>** Dialog Box and then enter or edit the address.

A length can be inserted into a message by left-clicking the **Insert** Button on the **Length** Field. If a length already exists or if an attempt is made to insert the length before the header or after the terminator, this button cannot be used.
If an address is to be inserted or if it needs to be modified, left-click the **Edit** Button to display the **Length <l>** Dialog Box and then enter or edit the length.

b) Create or insert data items of a message in the **Message Data** Field. Using the **<<** or **>>** Button, move the cursor to a place where data items are to be inserted.

- Select one of the items from the drop-down list in the **Message Data** Field.

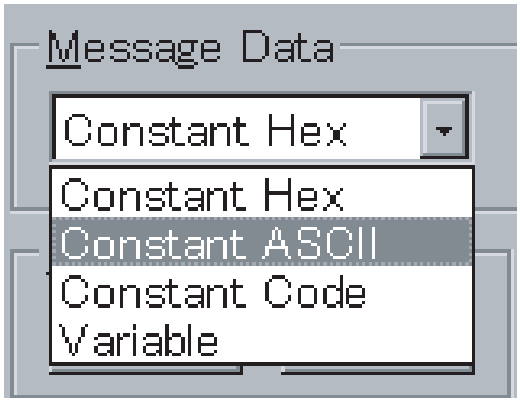

- When either the **Constant Hex** or **Constant Code** is selected, left-click the **Edit** Button to display the **HEX Entry** or **Code Entry** Dialog Box. Using the dialog box, enter data and left-click the **Insert** to insert hexadecimal numbers or code in the message.

Note For the input methods, refer to the previous descriptions for the Header <h>. In the **Message Data** Field, up to 48 units of hexadecimal can be input.

- When ASCII is selected, input ASCII characters in the right field and then left-click the **Insert** Button to insert the data in the message.
- When Variable is selected, left-click the **Edit** Button to display the **Message Variable** Dialog Box. Left-click the **Insert** Button to insert the variable in the message. (For the input methods, refer to the previous descriptions for the address <a>.)

Note Message data cannot be inserted before the header or after the terminator.

Check Code and Length Ranges

If the check code or length is designated for a message, its range can be designated in the **Length <l>** or **Check Code <c>** Field.
Use the following procedure to designate the ranges.

1,2,3...

1. Left-click the **Up** Button or **Down** Button to designate the beginning or end item (in the order of 1, 2, 3, etc. from the left of a message) of the range. The display color of the designated item changes.

For example, when changing the check code from “3” to “5,” the display will change as shown below.

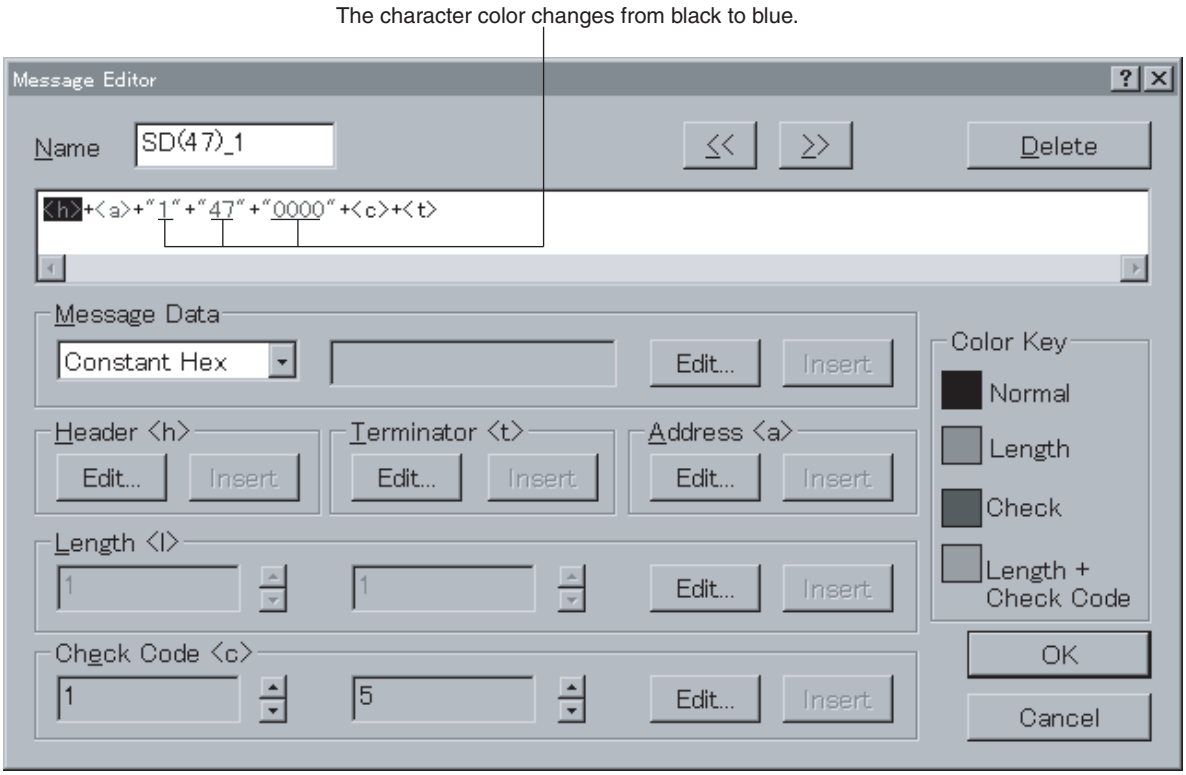

Press the **OK** Button to confirm the message data or press the **Cancel** Button to leave the settings unchanged. Input message will be displayed on the **Data** Field.

9-2 Matrix Creation

Use the procedures described in the following paragraphs to set a matrix when more than one received message is expected and the next process is to be changed for each receive message.

9-2-1 Creating a New Matrix

Use the following procedure to create a new matrix.

1,2,3...

1. Double-click the **Matrix List** Icon on the project workspace or project window.
2. Right-click the **Matrix List** on the project workspace or right-click in the project window to display a pop-up menu. Point at **Create** on the pop-up menu and select **Matrix**. **Create** can also be selected from the **Protocol** Menu.

9-2-2 Creating a New Matrix Case

Use the following procedure to create a new matrix case in a matrix.

1,2,3...

1. Double-click the **Matrix** Icon on the project window.
2. Right-click in the project window to display a pop-up menu. Point at the **Create** on the pop-up menu and select **Matrix**. **Create** can also be selected from the **Protocol** Menu.

9-2-3 Editing a Message in the Matrix Case

Use the following procedure to set a receive message.

1,2,3...

1. Double-click the **Matrix** Icon on the project window.
2. Left-click the **Receive Message** Field on the **Matrix Case**.
3. When setting an existing receive message, left-click a desired receive message on the drop-down list.
   When creating a new receive message, right-click the **Receive Message** Field and then left-click **New Message**.
   When editing a set receive message, right-click the **Receive Message** Field and then left-click **Edit Message**.

9-2-4 Defining the Next Matrix Case Process

Use the following procedure to edit the next process.

1,2,3...

1. Double-click the **Matrix** Icon on the project window.
2. Left-click the **Next Process** Field on the **Matrix Case** and then left-click the **Enter** Button or press the **Enter** Key.
   The **Next Process** Dialog Box will be displayed.
3. Select **Next Process** on the **Jump** Field. If **Goto** is selected, enter a sequence step number that will be referred to.
4. Left-click the **OK** Button to confirm the setting or **Cancel** Button to cancel the process.

9-3 Message and Matrix Editing

9-3-1 Displaying Messages within the Protocol

Use the following procedure to display all the messages within the protocol.

1,2,3...

1. Left-click the protocol in the project workspace to highlight the protocol or double-click the **Protocol** Icons containing a sequence in the project window.
2. Double-click the **Send Message List** Icon or **Receive Message List** Icon on the project window to display all the messages contained in the message list.

9-3-2 Renaming a Message

Use the following procedure to rename a message in the send or receive message lists. Messages belonging to **System** protocols cannot be changed.

1,2,3...

1. Left-click the **Message Name** Field to be renamed from the message list. Alternatively, select **Message Name** and press the **Enter** Key.
2. Type in a new name for the message and press the **Enter** Key. The new message name must not exceed 10 characters.

Note The name given to a send message cannot be used for the receive message within a protocol.

9-3-3 Copying a Message

Use the following procedure to copy a message within a protocol or between protocols.

Note Messages within the **System** protocols can be copied, but the message becomes editable once pasted into a message list in a User category protocol.

1,2,3...

1. Select the icon of the message to be copied, either from the send message list or the receive message list. More than one message can be selected by pressing the **Shift** Key and selecting another message to extend the selection or by pressing the **Ctrl** Key and selecting another message to add to the selection.

2. Left-click the **Copy** Icon on the toolbar or press the **Ctrl**+**C** Keys. Alternatively, right-click to display a pop-up menu and then select **Copy** in the pop-up menu. It can also be selected from the **Edit** Menu.
3. Left-click the **Message List** Icon in the project workspace or display the message in the project window and designate the destination where the message is to be pasted.

4. Left-click the **Paste** Icon on the toolbar or press the **Ctrl** + **V** Keys. Alternatively, right-click to display a pop-up menu and then select **Paste** in the pop-up menu. **Paste** can also be selected from the **Edit** Menu. The pasted message will be positioned at the end of the corresponding message list.

   Note Make sure that another Copy or Cut operation does not take place during this procedure as this deletes the original copy.

9-3-4 Deleting a Message

Use the following procedure to delete messages. Messages within the **System** protocols cannot be deleted.

1,2,3...

1. Select the icon of the message to be deleted, either from the send message list or the receive message list. More than one message can be selected by pressing the **Shift** Key and selecting another message to extend the selection or by pressing the **Ctrl** Key and selecting another message to add to the selection.

2. Left-click the **Delete** Icon on the toolbar or press the **Delete** Key. Another method is to right-click and select **Delete** from the pop-up menu. **Delete** can also be selected from the **Edit** Menu.
   Alternatively, left-click the **Cut** Button on the toolbar or press the **Ctrl**+**X** Keys. Right-click to display a pop-up menu and then select **Delete** in the pop-up menu.
   Left-click the **Paste** Icon from the toolbar or press the **Ctrl**+**V** Keys to retrieve the last delete action using the Cut operation. The pasted message will be positioned at the end of the corresponding message list.

Note Once a message has been deleted, it cannot be recovered.

9-3-5 Displaying the Matrix within the Protocol

Use the same procedure as described in *9-3-1 Displaying Messages within the Protocol*.

9-3-6 Displaying the Matrix Case within the Matrix

Use the following procedure to display the matrix case within the matrix.

1,2,3...

1. Left-click the protocol list in the project workspace to display all the protocols in the project window.

2. Left-click the **Protocol** Icon that contains the matrix list.
3. Double-click the **Matrix List** Icon to display the matrix in the project window.

4. Double-click the **Matrix** Icon to display each matrix case in the project window.

9-3-7 Copying the Matrix Case

Use the following procedure to copy a matrix case in the matrix or between matrices.

1,2,3...

1. Left-click the **Matrix Case** Icon to be copied. More than one case can be selected by pressing the **Shift** Key and selecting another case to extend the selection or by pressing the **Ctrl** Key and selecting another case to add to the selection.

2. Left-click the **Copy** Icon on the toolbar or press the **Ctrl**+**C** Keys. Alternatively, right-click to display a pop-up menu and then select **Copy** in the pop-up menu. **Copy** can also be selected from the **Edit** Menu.
3. Select a matrix case or display in the project window and designate the destination where the matrix case is to be pasted.

4. Left-click the **Paste** Icon on the toolbar or press the **Ctrl**+**V** Keys. Alternatively, right-click to display a pop-up menu and then select **Paste** in the pop-up menu. **Paste** can also be selected from the **Edit** Menu. The pasted matrix case will be positioned at the end of the matrix case list except the case number 15.

9-3-8 Moving the Matrix Case

Move the selected matrix case to change the order of matrix cases. Use the following icons to change the order of matrix cases. (The matrix case list belonging to the **System** protocols cannot be edited.)

Select a matrix case and press the **Up** Icon on the toolbar to move up the selected matrix case by one. It can also be selected by right-clicking to display the pop-up menu and then selecting **Move** from the menu list.

Select a matrix case and press the **Down** Icon on the toolbar to move down the selected matrix case by one. It can also be selected by right-clicking to display the pop-up menu and then selecting **Move** from the menu list.

Select the matrix case and press the **Top** Icon on the toolbar to move the matrix case to the case number 00 position. It can also be selected by right-clicking to display the pop-up menu and then selecting **Move** from the menu list.

SECTION 10
Communications PLC Setup and Online Connections

This section describes details of the communications settings and online connections.

10-1 PLC System Configuration. 260
10-1-1 Outline of Operation 260
10-2 Communications Settings between Personal Computer and PLC 261
10-2-1 Outline of Connection Methods. 261
10-2-2 Direct Connections to PLC for Online Communications 262
10-2-3 Connections to PLC on Network via Online Communications 264
10-3 Online Connections and Mode Changes 268
10-3-1 Online Connection Method 268
10-3-2 Changing to Offline 270
10-3-3 PLC Operating Mode Changes 270
10-4 Modem Connections. 270
10-4-1 Outline 270
10-4-2 Settings at the PLC Side. 271
10-4-3 Settings at the Personal Computer 275
10-4-4 Online Connection 279
10-5 I/O Table Creation 279
10-5-1 I/O Table. 279
10-6 PMSU Communications Port Settings 280
10-7 Transfer of Communications Port Setting Data to PLC. 282
10-7-1 Transfer of Communications Port Setting Data to PLC. 282
10-7-2 Reading Communications Port Setting Data from PLC 283

10-1 PLC System Configuration

Left-click the **PLC** Icon before making the following settings.

1,2,3...

1. PLC model, communications between the personal computer and PLC, and Board and Unit settings.
2. Left-click the required **PMSU** Icon (Board/Unit) before performing the trace memory 1 (A), trace memory 2 (B), communications port 1 (A), or communications port 2 (B) settings.

   Note Use icons in parentheses if the C200HX/HG/HE is used.

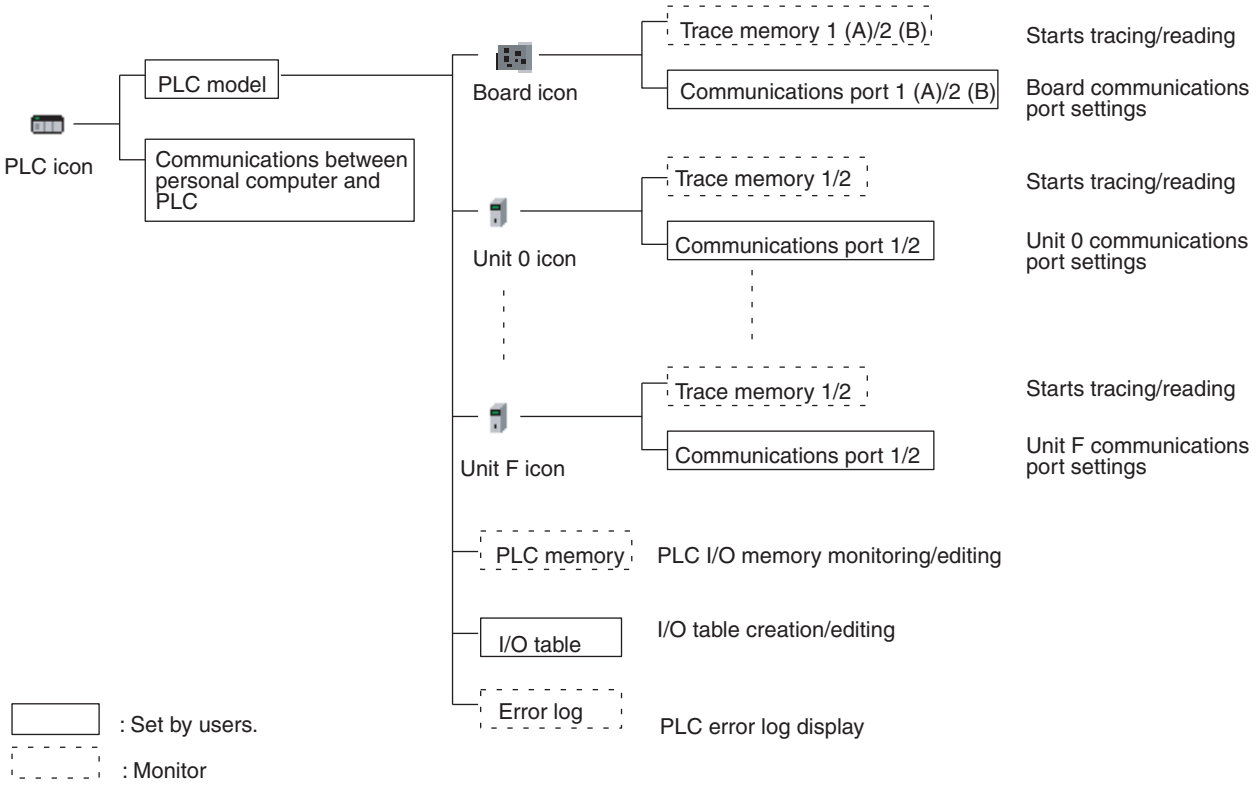

Note Those in brackets are for the C200HX/HG/HE.
Units 0 to F are for the CS/CJ.

10-1-1 Outline of Operation

The following operations are possible by right-clicking the **PLC** Icon in the PLC Menu, toolbar, or project workspace (i.e., the left pane of the window) and selecting the items from the pop-up menu that is displayed.

- Settings for communications between the personal computer and PLC.
- PLC online connections and changes in PLC operating mode.
- Reading and displaying protocol data from the Boards and Units.
- PMSU communications setting data transfer and trace memory starting and reading.
- I/O table creation, PLC I/O memory monitoring and editing, and error log display.

10-2 Communications Settings between Personal Computer and PLC

10-2-1 Outline of Connection Methods

The following three methods are available for PLC connections for online communications.

Direct Connections to PLC for Online Communications

The following shows how the personal computer can be connected directly for online communications with the PLC using the toolbus or host link.

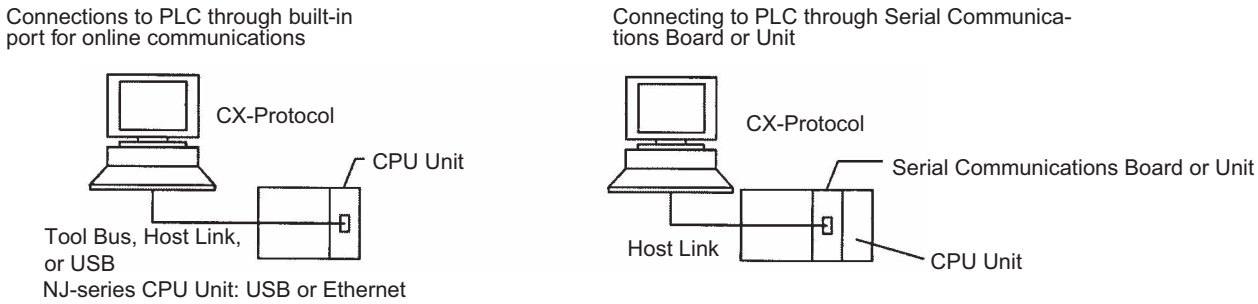

Connections to PLC via Network for Online Communications

The following shows how the personal computer can be connected online to a PLC on the network via another PLC that is connected to the personal computer using the toolbus or host link.

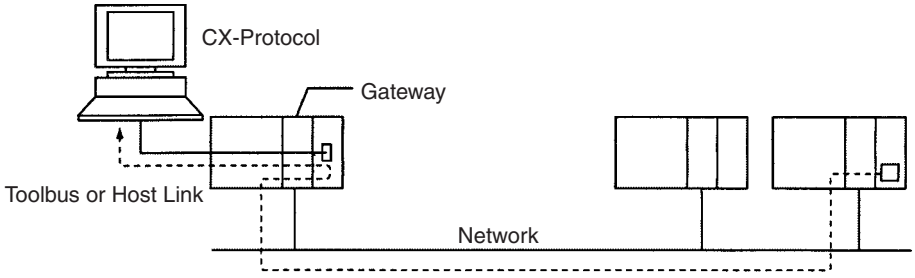

Note This type of connection is not supported for an NJ-series CPU Unit.

Connections to PLC via Modem for Online Communications

The following shows how the personal computer can be connected online to a PLC via a telephone line using a modem. The PLC connected to via a modem can also be used as a gateway for online connection to other PLCs on the network. For settings, refer to *10-4 Modem Connections*.

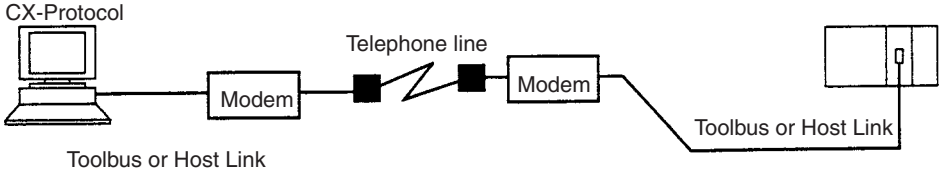

Note This type of connection is not supported for an NJ-series CPU Unit.

10-2-2 Direct Connections to PLC for Online Communications

Setting PLC Model

Use the following procedure to set the PLC model.

1,2,3...

1. Right-click the **PLC** Icon and select **Edit PC-PLC Comms Settings** from the pop-up menu, or select **Edit PC-PLC Comms Setting** from the **PLC** Menu.

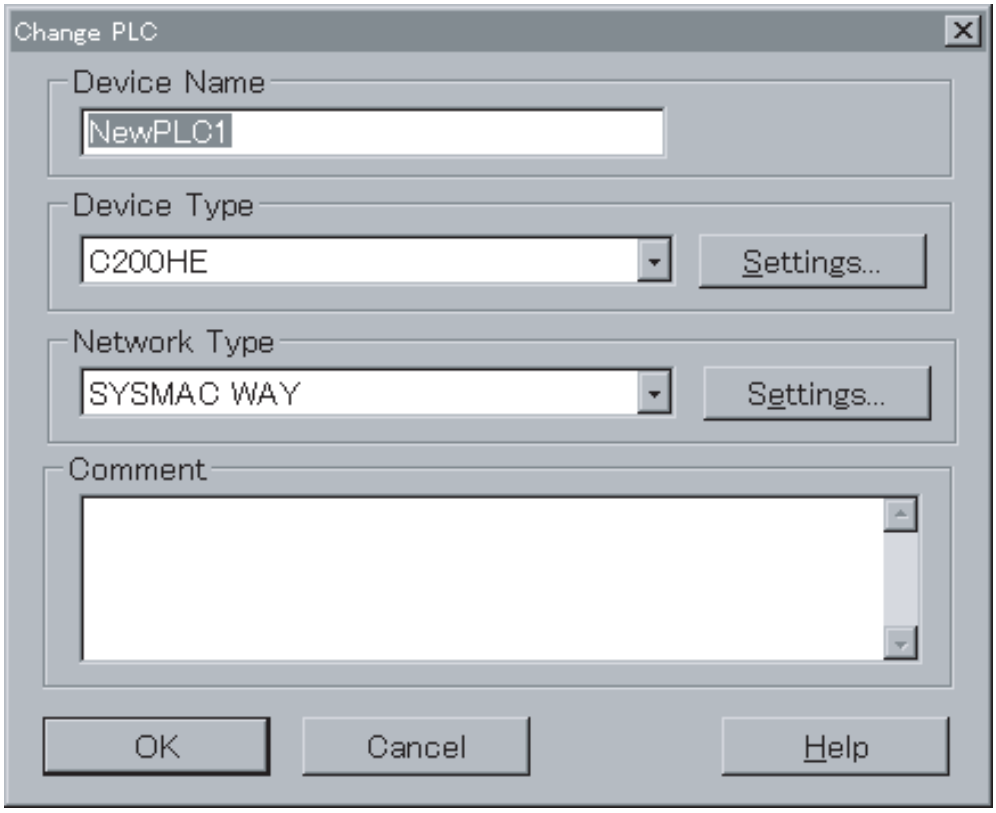

2. Select the PLC Series from the **Device Type** drop-down list.
3. Left-click the **Settings** Button to enter the setting.

Communications Settings

1,2,3...

1. After you set the model of the CPU Unit in the above procedure, select the network type from the **Network Type** drop-down list. In this example, SYSMAC WAY is selected.
2. Left-click the **Settings...** Button on the right-hand side. The **Network Setting** Dialog Box will be displayed.

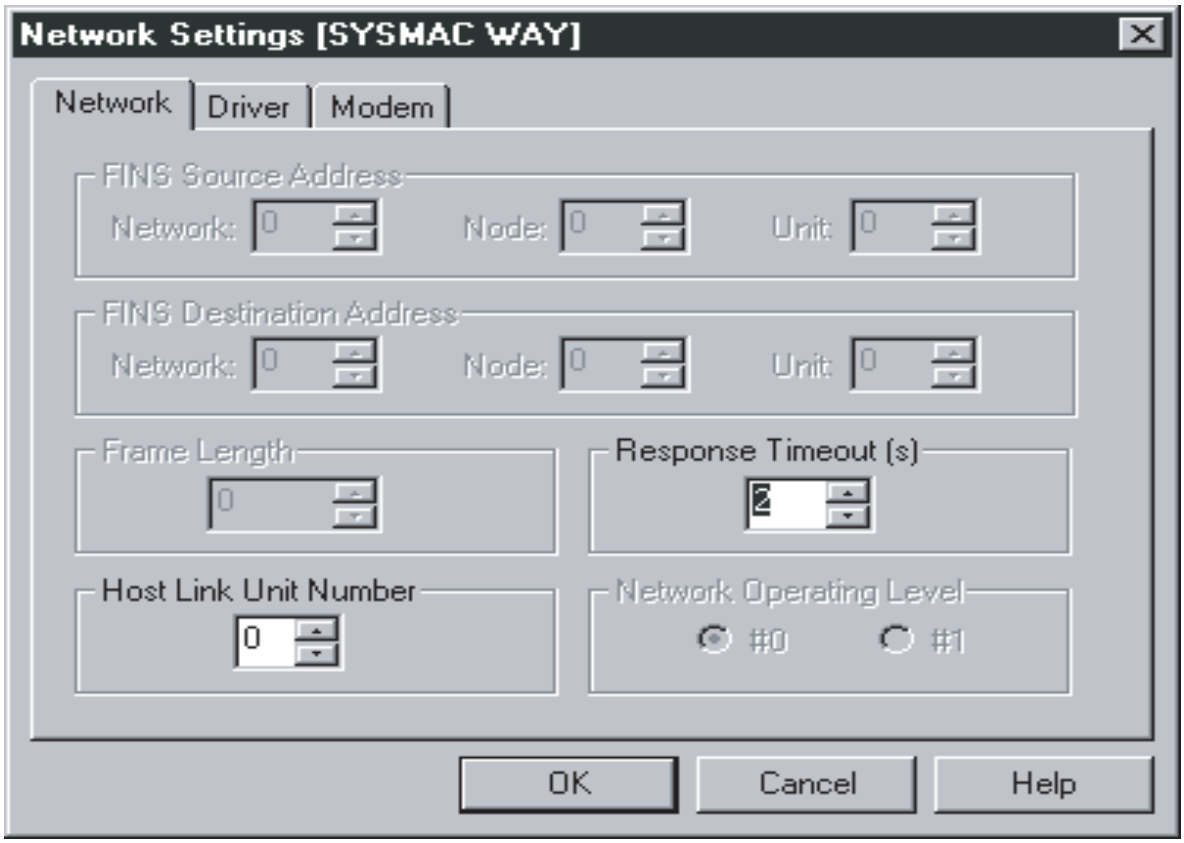

3. Left-click the **Driver** Tab in order to change the communications conditions. The name of port, baud rate, data length, parity, and number of stop bits can be set.

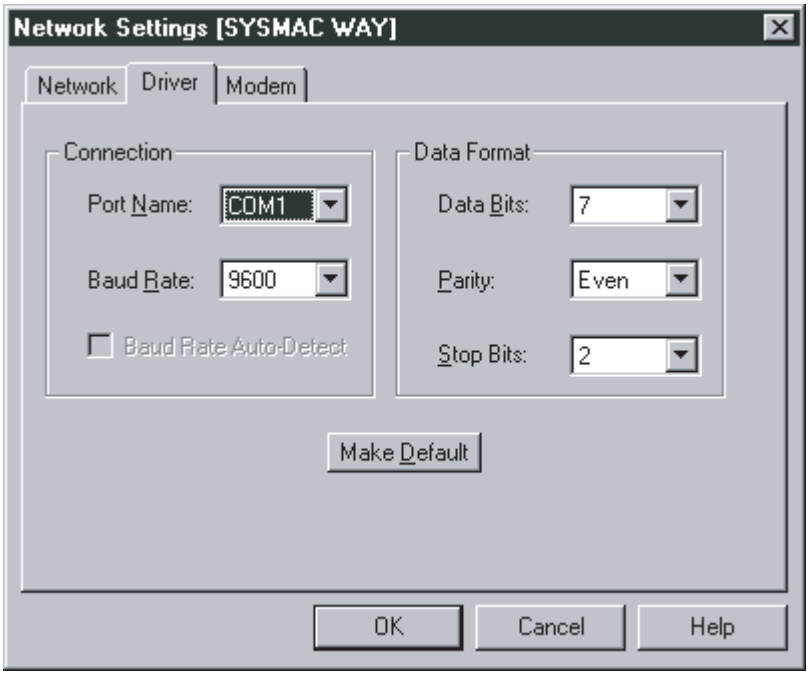

Note The communications conditions must coincide with those in the PLC Setup of the CPU Unit. For details, refer to the Operation Manual of the PLC.

4. Left-click the **OK** Button.

Note With the C200HX/HG/HE, the baud rate cannot be set to 1,200 bps for connections using the toolbus.

10-2-3 Connections to PLC on Network via Online Communications

Outline

By making simple settings with the CX-Protocol, it is possible for the personal computer to connect online to a PLC on the network via another PLC that is directly connected to the personal computer.

The following explains the settings required for the personal computer to communicate with a PLC on the network.

These settings make available all online functions (e.g., protocol transfer, communications port setting transfer, and tracing) for the control of PMSU mounted to the PLC on the network.

Settings

The following system example shows how to make the settings required to connect the personal computer to a PLC on the network.

The CX-Protocol connects the personal computer online to a PLC (**PLC100** in this example) on the network through another PLC (**PLC000** in this example), that has been registered with the project by using the CX-Protocol.

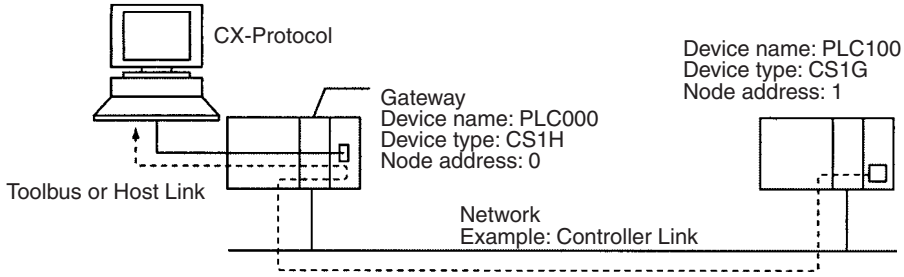

Note This type of connection is not supported for an NJ-series CPU Unit.

1,2,3...

1. In this example, a new project is created for the PLC100, which is a CS1G/CJ1G type. Left-click **New** in the **File** Menu or left-click the **New** Icon on the toolbar.
2. Make settings in the **Change PLC** and the **Network Settings [Toolbus]** Dialog Boxes as shown below.
3. Click the **OK** Button.

Settings for PLC100

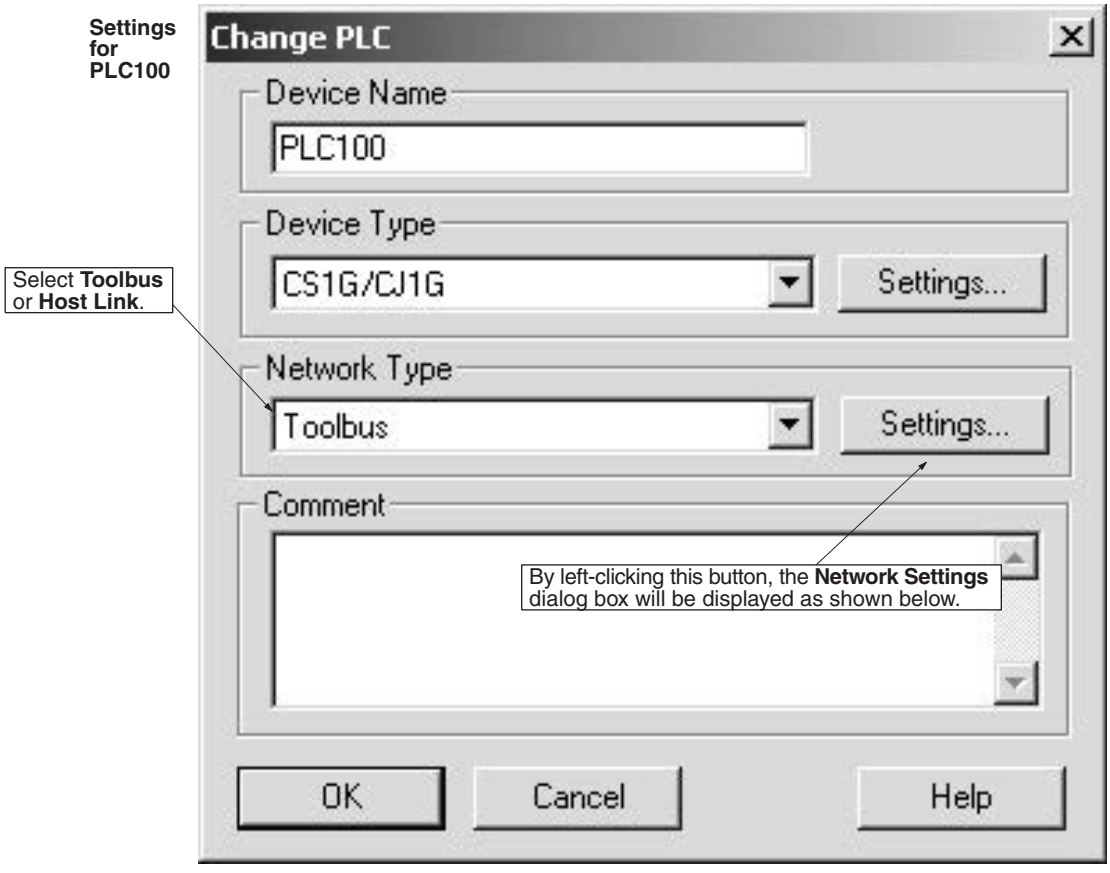

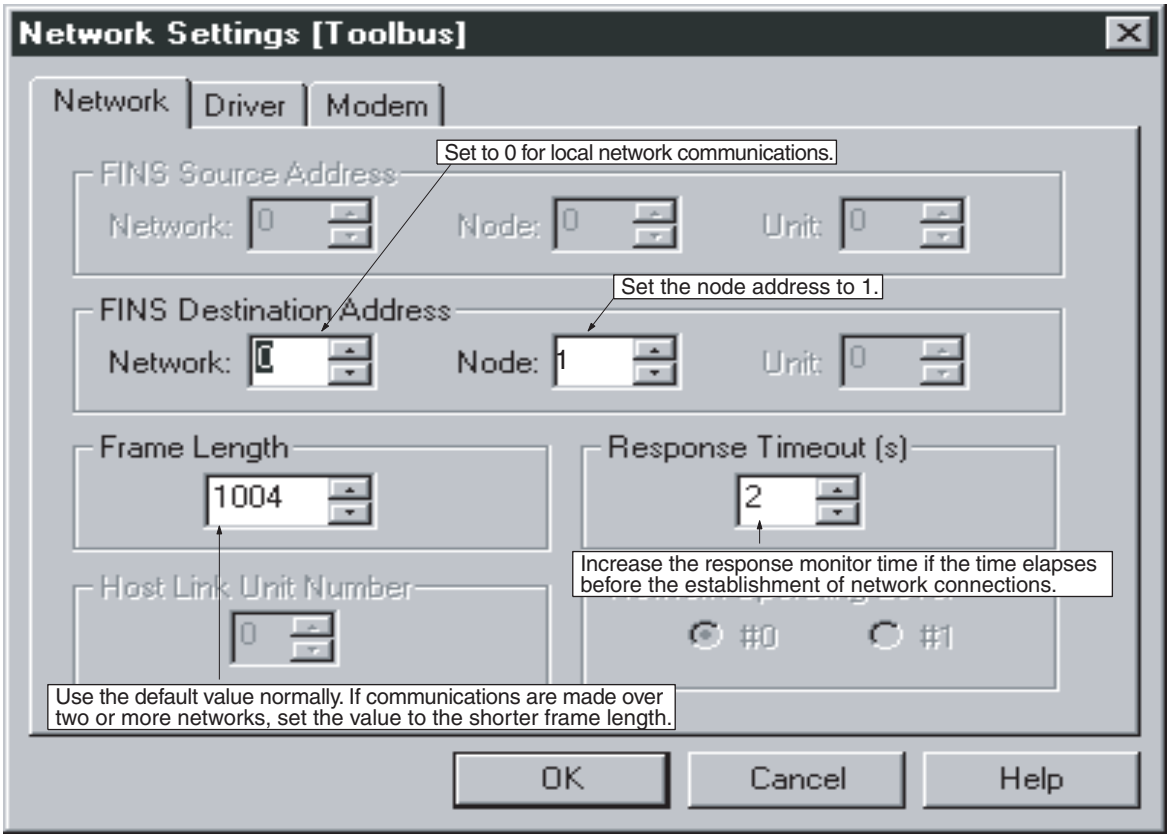

4. Left-click **CX-Net** in the **Tool** Menu.

5. Select **Add Device** from the **Project** Menu. Make settings for **Network Type** and **Network Settings** as shown below.

Adding PLC000

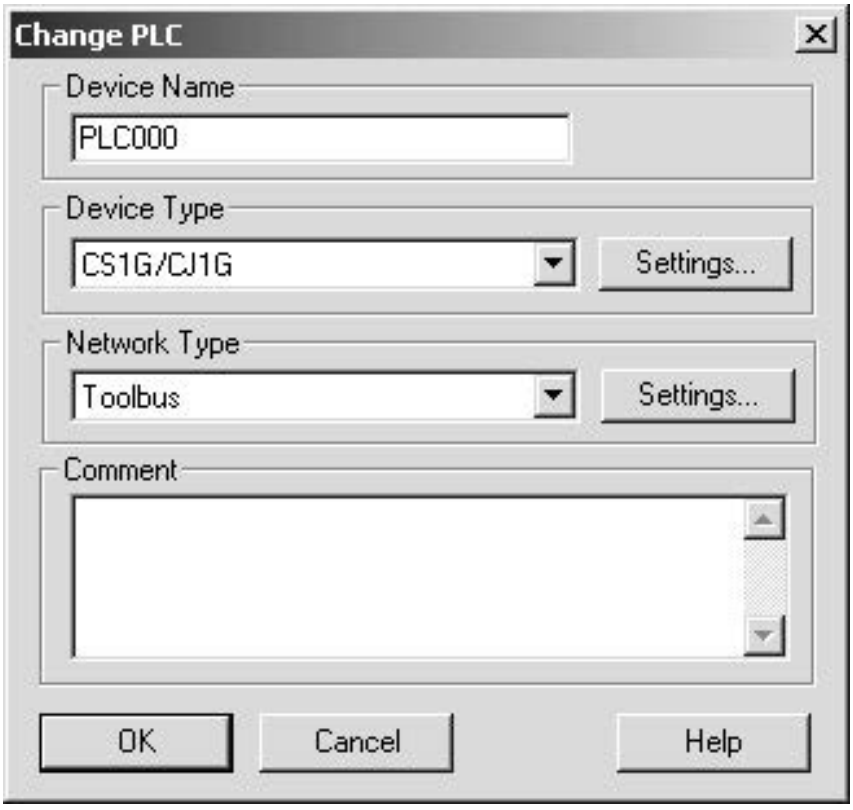

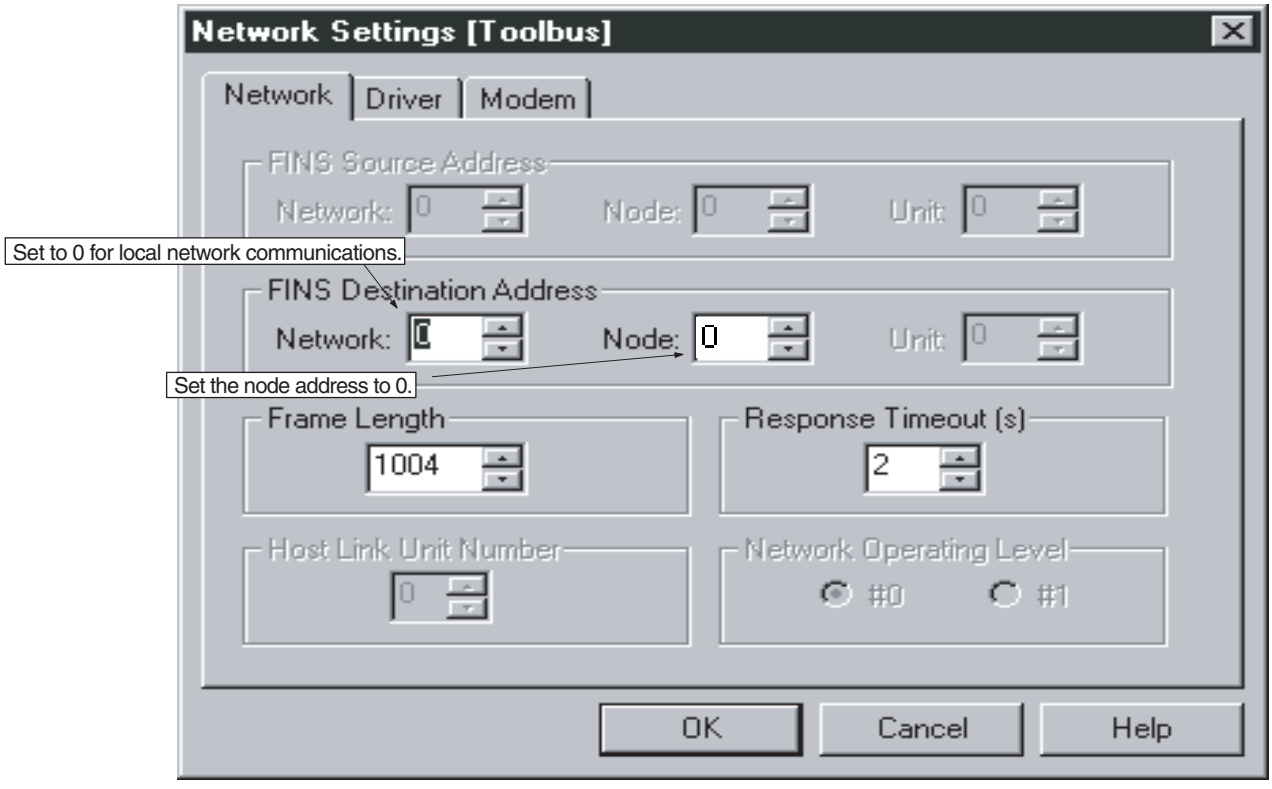

6. Close the **CX-Net** (CX-Programmer). Right-click the **PLC** Icon in the project workspace and select **Change** from the pop-up menu. Alternatively, select **Edit** from the **Edit** Menu.
7. Change the **Network Type** in the **Change PLC** Dialog Box to PLC000.

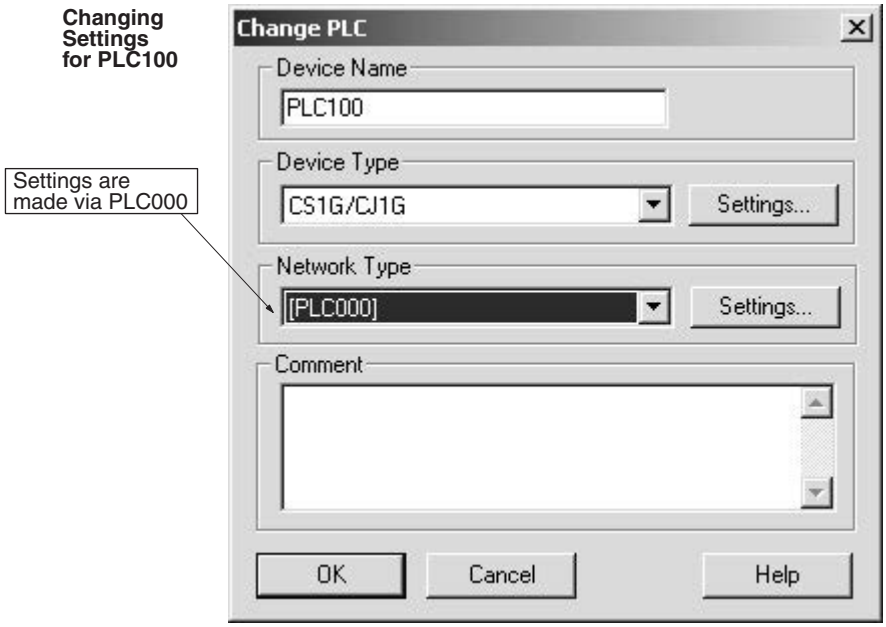

By making the above settings, PLC000 becomes the gateway for communications with PLC100. To make an online connection, right-click **PLC100** in the project workspace and select **Connect to PLC**, or select **Connect to PLC** from the **PLC** Menu.

Note CX-Net (PLC Network Configuration Tool) is used for performing construction, debugging, and applications for OMRON PLC networks. It is used for the following:

- Connecting a PLC to a network
- Routing table settings
- Data link table settings
- Network Support Board (NSB) settings
- Communications Unit software switch settings

For details about CX-Net, refer to *Section 13 PLC Network Configuration Tool* in the *SYSMAC WS02-CXPC1 CX-Programmer Operation Manual* (W344).

10-3 Online Connections and Mode Changes

10-3-1 Online Connection Method

Use the following procedure for online connections.

1,2,3...

1. Right-click the **PLC** Icon and select **Connect to PLC** from the pop-up menu, or select **Connect to PLC** from the PLC Menu.
2. When the establishment of online connections is successful, the PLC mode (**RUN**, **PROGRAM**, or **MONITOR**) will be displayed next to the **PLC** Icon in the project workspace (i.e., the left pane of the window).

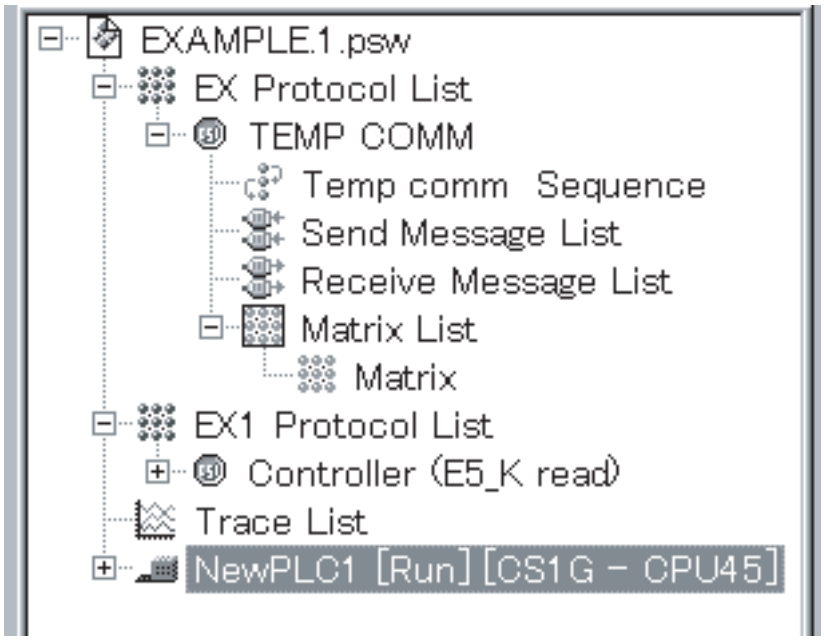

If the establishment of online connections is unsuccessful, the following screen will be displayed. Check the communications settings.

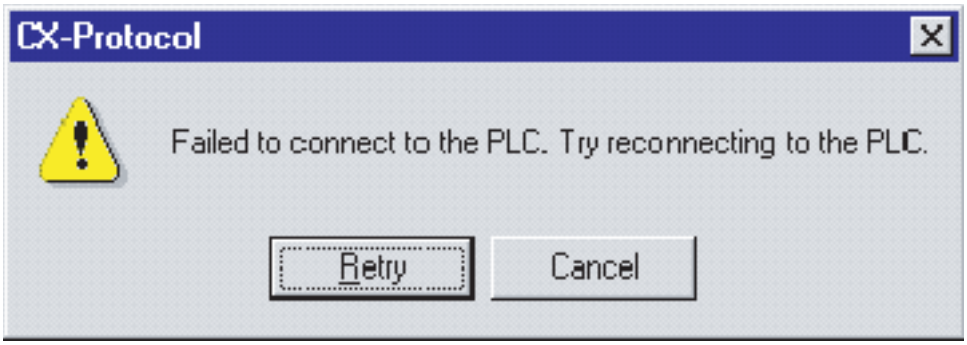

Note When the NJ-series Controller is configured as follows, online connection may not be possible.

- The **Do not use** Option is selected for **FINS/UDP** in the **FINS Settings** of the **Built-in EtherNet/IP Port Settings**, that is located under **Configurations and Setup - Controller Setup** on the Sysmac Studio.
- The **Do not use** Option is selected for **FINS/TCP** in the **FINS Settings** of the **Built-in EtherNet/IP Port Settings**, that is located under **Configurations and Setup - Controller Setup** on the Sysmac Studio.
- The **Use** Option is selected for **Packet Filter** in the **TCP/IP Settings** of the **Built-in EtherNet/IP Port Settings**, that is located under **Configurations and Setup - Contoller Setup** on the Sysmac Studio.

For details on Packet Filter settings, refer to Packet Filter in the *NJ/NX-series CPU Unit Built-in EtherNet/IP Port User's Manual (Cat. No. W506)*.

Note The personal computer and PLC must be connected to each other for online communications before the following items are performed.

- Transfer of communications port setting data from PMSU (Data transfer from PLC to personal computer)
- Transfer of communications port setting data to PMSU (Data transfer from personal computer to PLC)
- Transfer of protocol data from PMSU(Data transfer from PLC to personal computer)

- Transfer of protocol data to PMSU (Data transfer from personal computer to PLC)
- Transfer of protocol list data from PMSU (Data transfer from PLC to personal computer)
- Start, stop, and transfer of tracing data (Data transfer from PLC to personal computer)
- I/O table creation
- I/O memory display/editing
- Error log display

!Caution Online connection of the CX-Protocol cannot be made to a PLC which is connected online to SYSMAC-CPT or SYSMAC-PST. Simultaneous online connections cannot be made regardless of whether there is only one personal computer (i.e.: the communications port is the same) or there are several personal computers (i.e.: the communications ports are separate). Therefore, when SYSMAC-CPT or SYSMAC-PST is running and connected online to a PLC, it must be made offline before making online connection to the CX-Protocol. Similarly, when the CX-Protocol is connected online to a PLC, it must be switched to offline before making online connection to SYSMAC-CPT or SYSMAC-PST.

10-3-2 Changing to Offline

Use the following procedure to set the CX-Protocol from online (i.e., PROGRAM, MONITOR, or RUN mode) to offline.

Right-click the **PLC** Icon and select **Disconnect from PLC** from the pop-up menu, or select **Disconnect from PLC** from the **PLC** Menu.

10-3-3 PLC Operating Mode Changes

Before transferring protocol data or communications port setting data, be sure to set the PLC to PROGRAM mode by using the following procedure.

Right-click the **PLC** Icon, select **Operating mode**, and select **PROGRAM mode**. Alternatively, select **Operating mode** from the **PLC** Menu and select the **PROGRAM mode**.

!Caution Confirm that no adverse effect will occur in the system before changing the operating mode of the CPU Unit. Not doing so may result in an unexpected operation.

10-4 Modem Connections

10-4-1 Outline

Online connection can be made to a remote PLC via telephone line using modems.

Note This type of connection is not supported for an NJ-series CPU Unit.

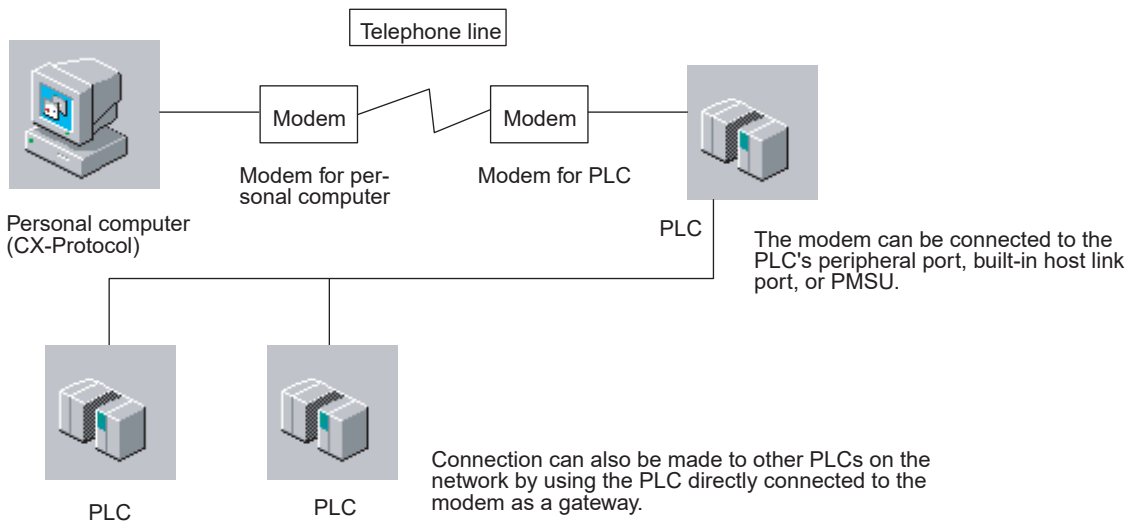

The setting procedures required to make connections to a remote PLC using modems are shown below.

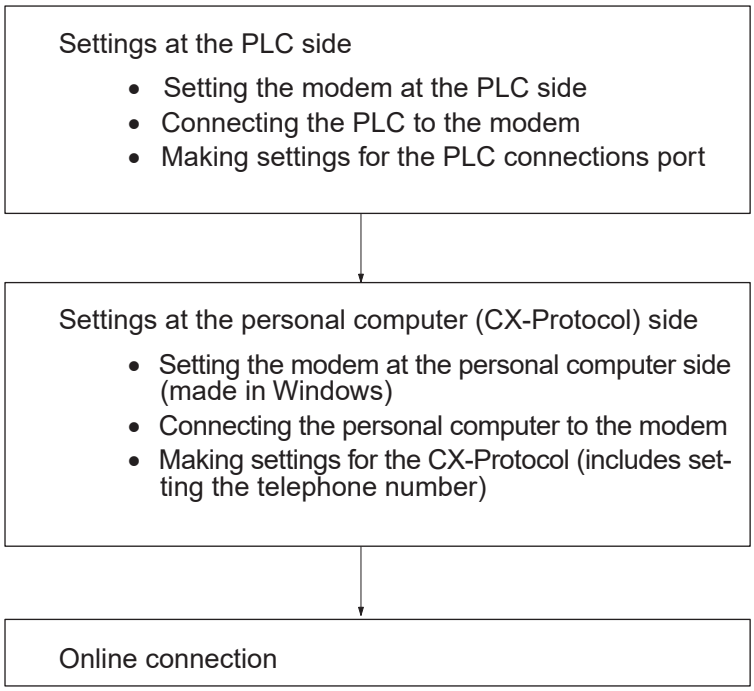

Make the settings so that the following conditions are satisfied.

- Baud rate: Set the same baud rate for the PLC communications port and the personal computer communications port.
- Serial communications mode: host link (SYSMAC WAY) or toolbus
- Communications conditions:

  When serial communications mode is set to host link:
  Data length: 7 bits
  Parity: even
  Stop bits: 2 bits

  When serial communications mode is set to toolbus:
  Data length: 8 bits
  Parity: none
  Stop bits: 1 bit

10-4-2 Settings at the PLC Side

Modem Settings

Make settings for the modem to be connected to the PLC using personal computer communications software (terminal software). Before performing the operations given below, connect a personal computer to the modem.

As an example, the operating method will be explained for OMRON's ME5614E modem.

1,2,3...

1. Turn ON the power supply for the modem.
2. Start the personal computer communications software.
3. Set the baud rate and communications format for the communications software in the following way.
   - Set the same baud rate as that of the PLC.
   - Set the communications format to one of the following:

     When serial communications mode is host link:
     Data length: 7 bits

Parity: even
Stop bit: 2 bits

When serial communications mode is toolbus:
Data length: 8 bits
Parity: none
Stop bit: 1 bit

Note When the above settings are made and communications are performed, OMRON's ME5614E Modem will automatically recognize and record the settings. If a modem without this feature is used, make the above settings using AT commands.

4. Make settings for the modem by sending AT commands as shown below.

   Example: for ME5614E

```
AT&F [Enter]
ok
AT%C0\N3&K3S0=1S30=60X4E0&D0&Y1 [Enter]
ok
AT&W1 [Enter]
ok
```

- The "[Enter]" indicates where the **Enter** Key should be pressed.
- The "ok" means that the modem has accepted the command.

Meanings of AT Commands and S Registers Used in the Previous Example

Command	Setting item	Settings
AT&F	Return to factory setting	---
AT%C0	Data compression setting	No data compression
AT\N3	Error correction setting	V.42 auto-reliable mode
AT&K3	Flow control	Available For C200HX/HG/HE, set to 0 (not available)
ATS0=1	Automatic reception	Available (for 1 call)
ATS30=60	Abort timer	(ex. 1 minute)
ATX4	Baud rate display	Baud rate display, busy, dial tone detection
ATE0	Command echo	Not available
AT&D0	DTR signal control	Constantly ON
AT&Y1	Setting at power ON	Load setting for profile 1 at power ON
AT&W1	Storage of present value area contents in non-volatile memory	Stored as profile 1

Connecting the PLC to the Modem

After the modem settings have been completed, connect the PLC to the modem.

Connect the PLC to the modem referring to the example below.

Connecting to the Host Link Port or PMSU

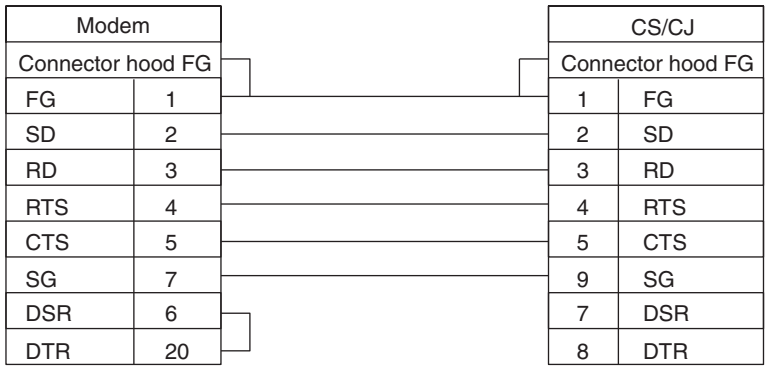

Connecting to the Peripheral Port

Connect a peripheral interface cable (for IBM PC/AT or compatible) to the peripheral port of the PLC, and connect the other end of the cable to a cable connected to the modem. For details on peripheral interface cables, refer to *1-4 System Configuration*.

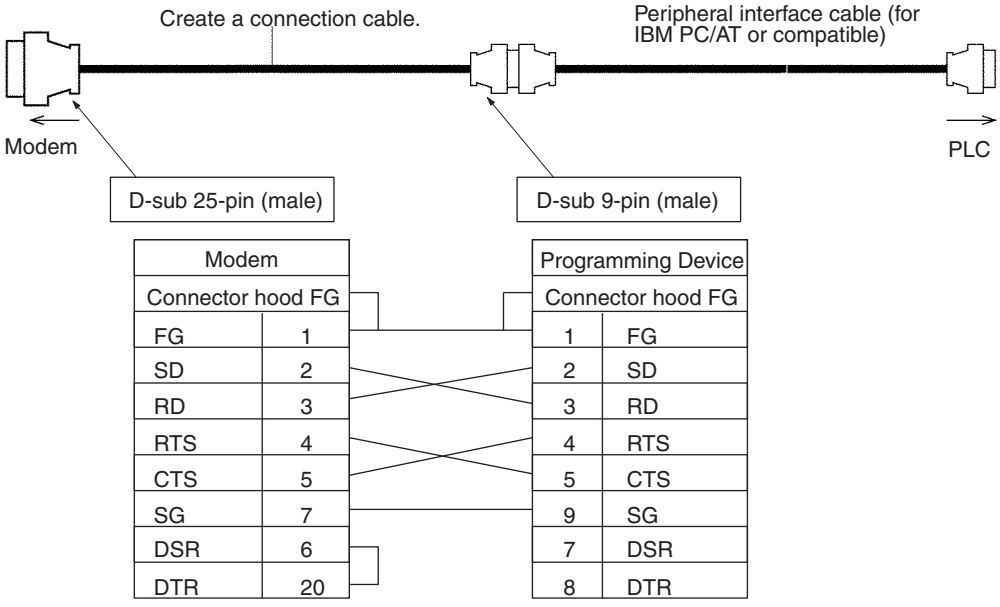

Settings for PLC Connections Port

Communications conditions settings for the PLC port to be connected to the modem are made on a PLC Programming Device (CX-Programmer or personal computer). After the settings have been made, direct online connection is made between the Programming Device and the PLC, and the settings are transferred.

As an example, the setting procedure for a CS/CJ-series PLC, using a CX-Programmer, is shown below. For details, refer to the *CX-Programmer Operation Manual*.

Connecting the Built-in Host Link Port to the Modem

Settings for the host link port are performed in the **PLC Settings** Window of the CX-Programmer, as shown below. Set the serial communications mode to **Host Link** or **ToolBus**. With the CS/CJ Series, when making connections with the toolbus, connections cannot be made via the modem using automatic recognition of the baud rate. Connections must be made using the toolbus settings in the PLC system settings.
Set pin 5 of the DIP switch on the front side of the CS/CJ-series CPU Unit to OFF (to follow the PLC system settings) and set the serial communications mode for the RS-232C port in the **PLC Settings** to **ToolBus**.

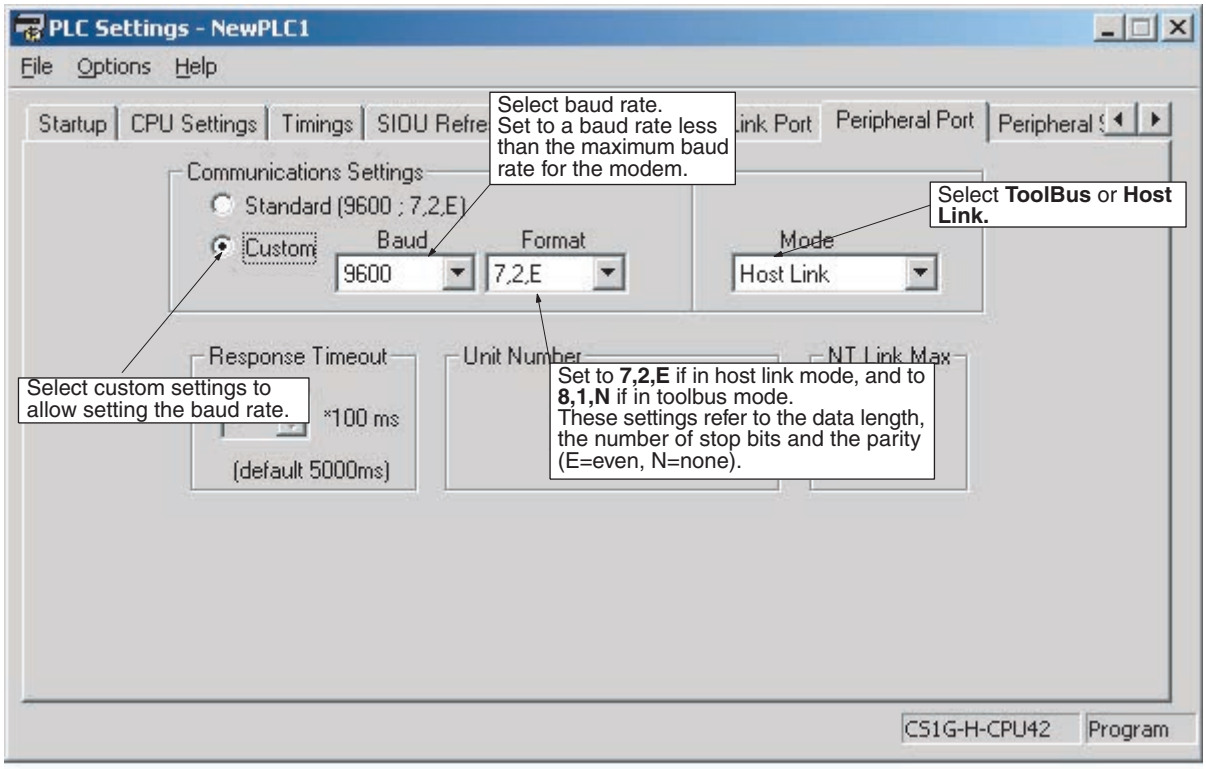

Connecting the Peripheral Port to the Modem

Settings for the peripheral port are made in the **PLC Settings** Window of the CX-Programmer. The setting method is the same as for the host link port above. Set the serial communications mode to **Host Link** or **Toolbus**. When making connections with the toolbus for the CS/CJ Series, connections cannot be made via the modem using automatic recognition of the baud rate. Connections must be made using the toolbus settings in the PLC system settings.
Set pin 4 of the DIP switch on the front side of the CS/CJ-series CPU Unit to ON (to follow the PLC system settings) and set the serial communications mode for the peripheral port in the **PLC Settings** to **ToolBus**.

Note With the C200HX/HG/HE, there is no automatic recognition function for the baud rate.

Connecting the PMSU (Ports 1, 2) to the Modem

Settings for the communications port of the PMSU are made in the **I/O Table** Window of the CX-Programmer. Set the serial communications mode to **Host Link**.
It is also possible to make the settings for the PMSU communications port and transfer them using the CX-Protocol. In **Communications Port Settings Edit**, set the **Mode** in the **Communications Port Settings** Dialog Box of the PMSU to **Host link**. For details refer to *10-6 PMSU Communications Port Settings* and *10-7 Transfer of Communications Port Setting Data to PLC*.

Note Toolbus connection is not supported by the PMSU.

Transferring the Settings

After the communications conditions for the port have been set, transfer the settings to the PLC. Make direct online connection to the PLC to be connected to the modem and transfer the settings in the following way.

Using the CX-Programmer:

- In the **PLC Settings** Window, select **Options/Transfer to PLC**.
- In the **I/O Table** Window, select **Options/Transfer to PLC**.

Using the CX-Protocol:

- For details refer to *10-6 PMSU Communications Port Settings* and *10-7 Transfer of Communications Port Setting Data to PLC*.

10-4-3 Settings at the Personal Computer

Modem Settings

This section explains how to make the settings for the modem to be connected to the personal computer. As an example, the setting procedure for the OMRON Modems (ME5614E, ME5614C) are given.

ME5614E

1,2,3...

1. Connect the modem to COM1 or COM 2 of the personal computer using a straight cable.
2. Turn ON the power supply for the personal computer.
   Windows will recognize the modem and the Wizard will be displayed.
3. Make settings according to the instructions given by the Wizard.

On completion of the above, the modem can be used from the personal computer.

ME5614C

1,2,3...

1. Insert the modem card in the PLC card slot.
2. Turn ON the power supply for the personal computer.
   Windows will recognize the modem and the Wizard will be displayed.
3. Make settings according to the instructions given by the Wizard.

On completion of the above, the modem can be used from the personal computer.

Connecting the Personal Computer to the Modem

Connect the personal computer (CX-Protocol) to the modem using the modem's RS-232C cable.

CX-Protocol Settings

1,2,3...

1. Display the **Change PLC** Dialog Box with the CX-Protocol.
2. Select **SYSMAC WAY** (host link) or **Toolbus** from the **Network Type** selection box.

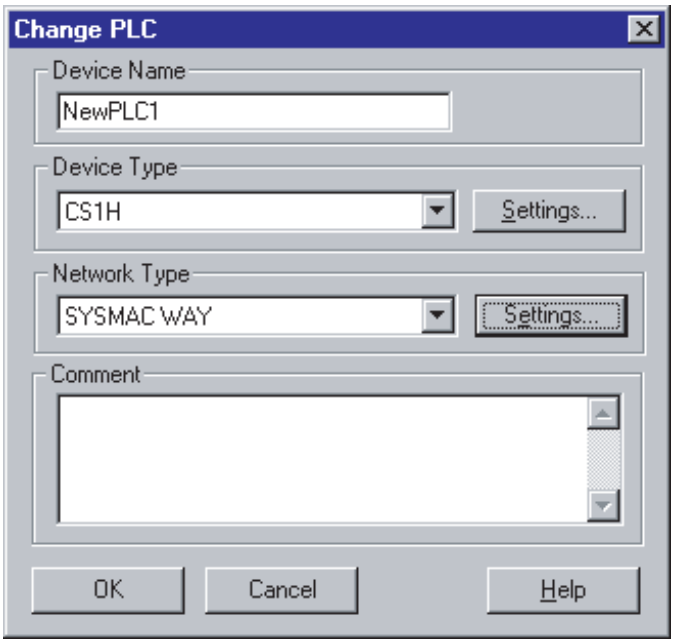

3. Left-click the **Settings...** Button to the right of the **Network Type** selection box. The **Network Setting** Dialog Box will be displayed.
4. Specify the PLC to be connected to in the **Network** Tab.
   - When making connections to a PLC that is connected directly to the modem, set **Network** to "0" and **Node** to "0" (default settings).
   - When making connections from a PLC directly connected to a telephone to another PLC on the network, make the appropriate settings for the network address and the node address. For details of network communications, refer to *10-2 Communications Settings between Personal Computer and PLC*.

5. Left-click the **Modem** Tab, and make settings for the modem driver, the present address, and the destination telephone number.

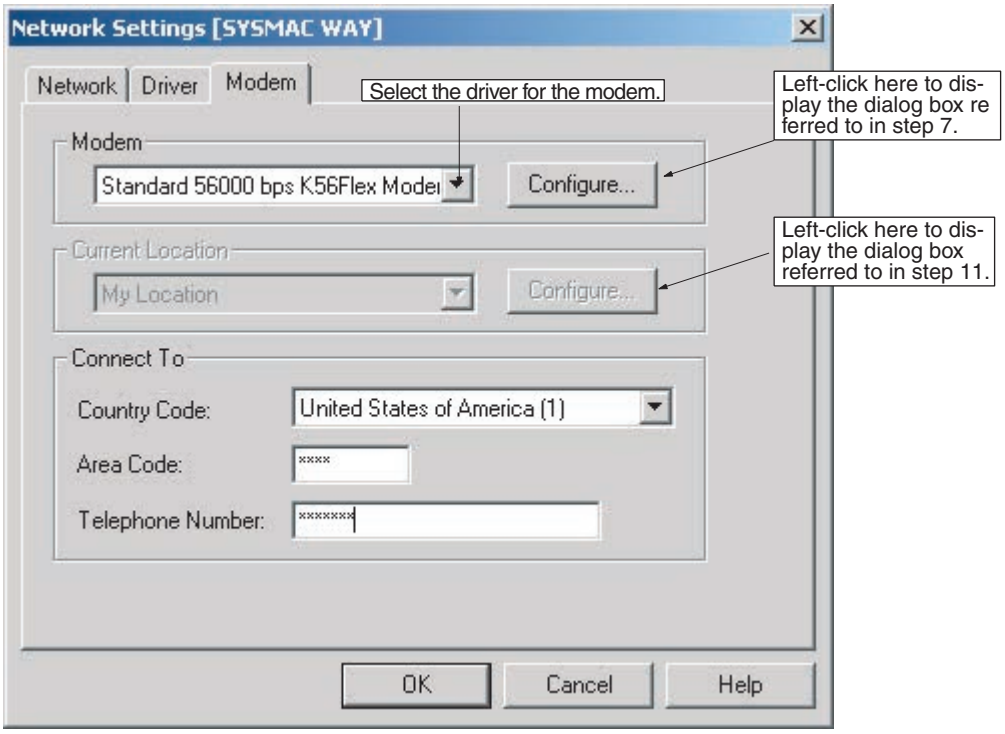

Use the following procedure to make settings for the modem and the present address.

6. Left-click the **Configure...** Button to the right of the **Modem** selection box. The following screen, which is used to set the properties for the modem, will be displayed.

7. Left-click the **General** Tab and set the baud rate for communications between the personal computer and the modem.

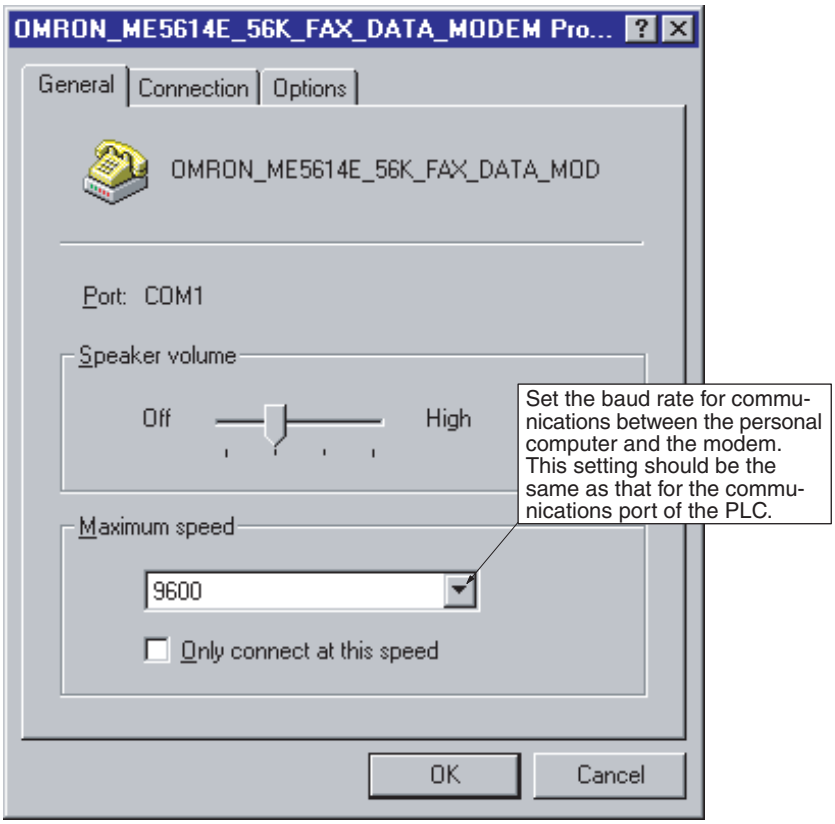

8. Left-click the **Connection** Tab and set the communications conditions.

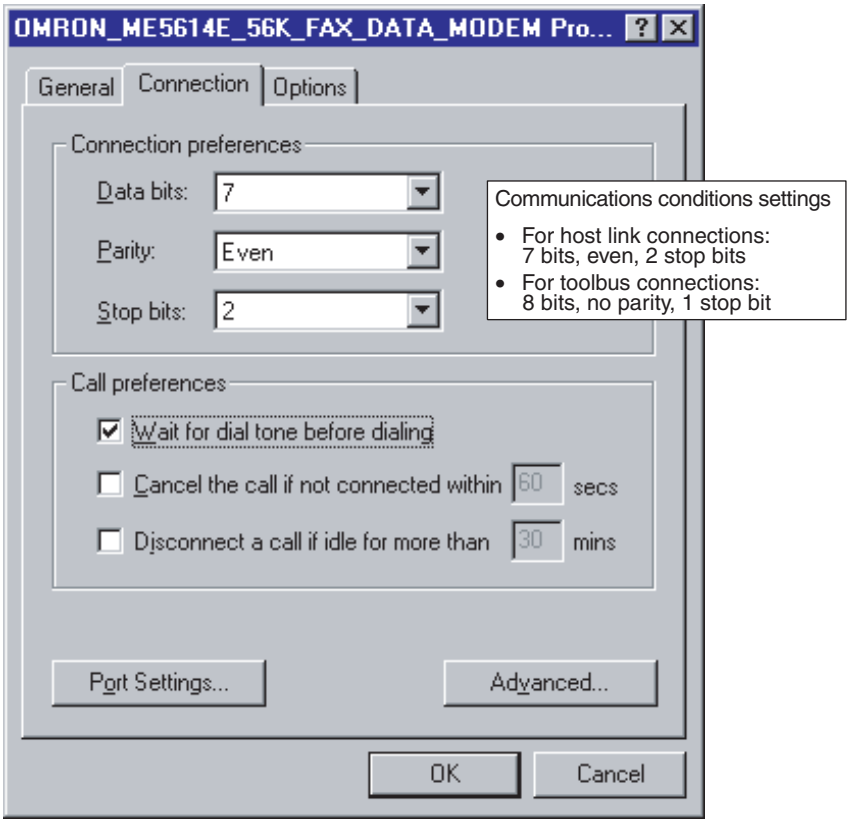

Note These dialog boxes take priority in making the settings for the modem. The settings made in the **Driver** Tab of the **Network Setting** Dialog Box (see step 5 above) will be ignored if they are different.

9. Left-click the **Advanced** Button.
   The **Advanced Connection Settings** Dialog Box will be displayed.
10. Make settings for error control and flow control. Make the settings as follows.
    - **Use Error Control**: Only select **Compress data**
    - **Use Flow Control**: Select **Hardware (RTS/CTS)**

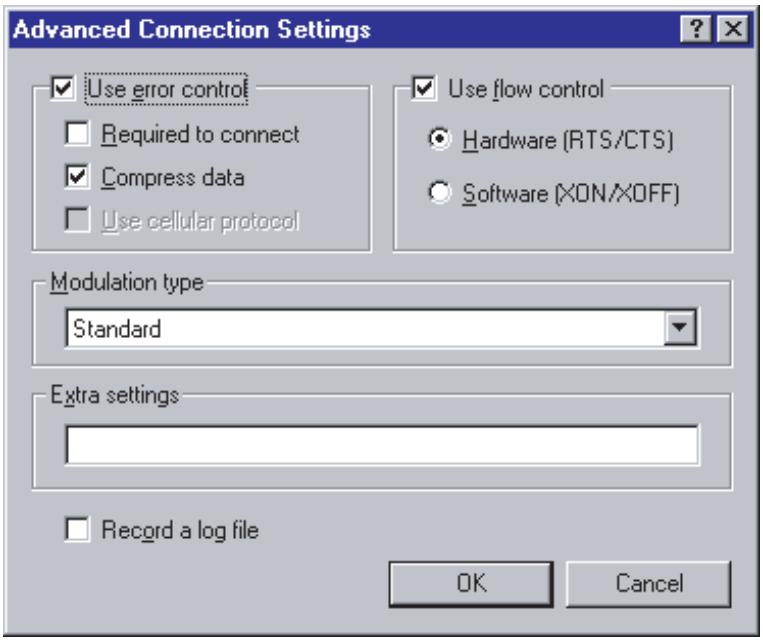

    - After the settings have been made, double-click the **OK** Button to return the **Network Setting** Dialog Box.
11. Open **Location Information** Dialog Box from the Phone and Modem Options in the Control Panel, and set the information for the modem to be connected to the CX-Protocol. Make the appropriate settings for the types of modem and telephone line.

On completion of the above, the settings for the personal computer are made.

10-4-4 Online Connection

When online connection operations are performed from the CX-Protocol, autodial will be executed, and connection to the remote PLC will be made via the modem.

10-5 I/O Table Creation

When mounting the CS/CJ-series Serial Communications Unit to the Backplane for the first time, use the following procedure to create an I/O table.

Note This operation is not supported for an NJ-series CPU Unit.

10-5-1 I/O Table

Note When the Serial Communications Unit is mounted to the PLC for the first time and the CPU Unit is turned ON, the ERR/ALM indicator of the CPU Unit will

flash. When online connections are established, an error log window will be displayed. Ignore the **PLC Errors** Window and use the following procedure to create an I/O table.

When the I/O table is created, the ERR/ALM indicator will turn OFF. Close the **PLC Errors** Window.

1,2,3...

1. Connect the personal computer to the PLC for online communications.
2. Set the PLC to **PROGRAM mode**.
3. Right-click the **PLC** Icon and select **I/O table** from the pop-up menu.

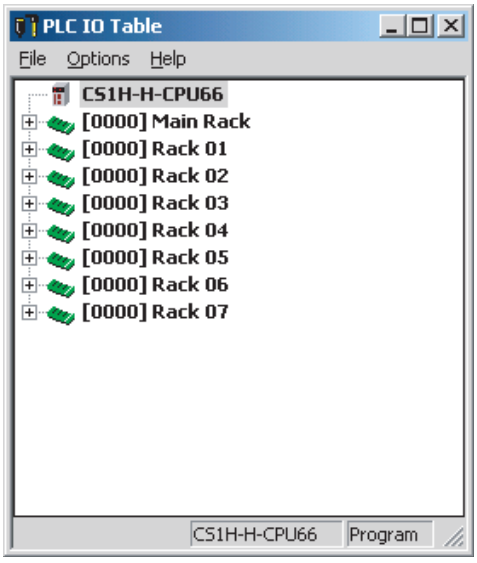

4. Select **Create** from the **Option** Menu.
5. After creating the I/O table, set CX-Protocol offline once and then return to online status. This enables the Serial Communications Unit information to be read by CX-Protocol.

   For details of I/O table functions, refer to *CX-Programmer Operation Manual*.

10-6 PMSU Communications Port Settings

Use the following procedure for the PMSU communications port settings.

1,2,3...

1. Double-click the **PLC** Icon in the project workspace (left pane).

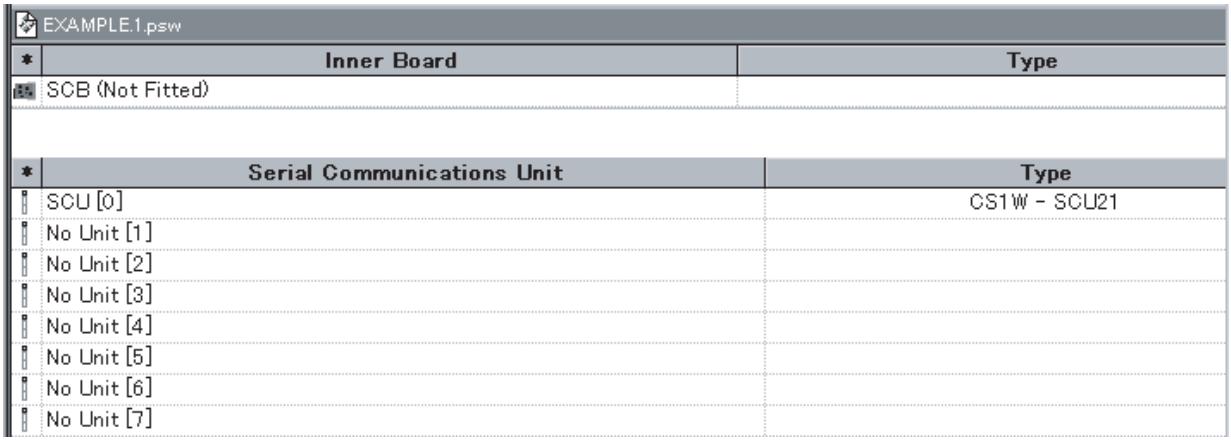

2. In the project window (right pane), double-click the **PMSU** Icon for which the communications port settings are to be made. Alternatively, left-click the **PMSU** Icon in the project workspace (left pane).

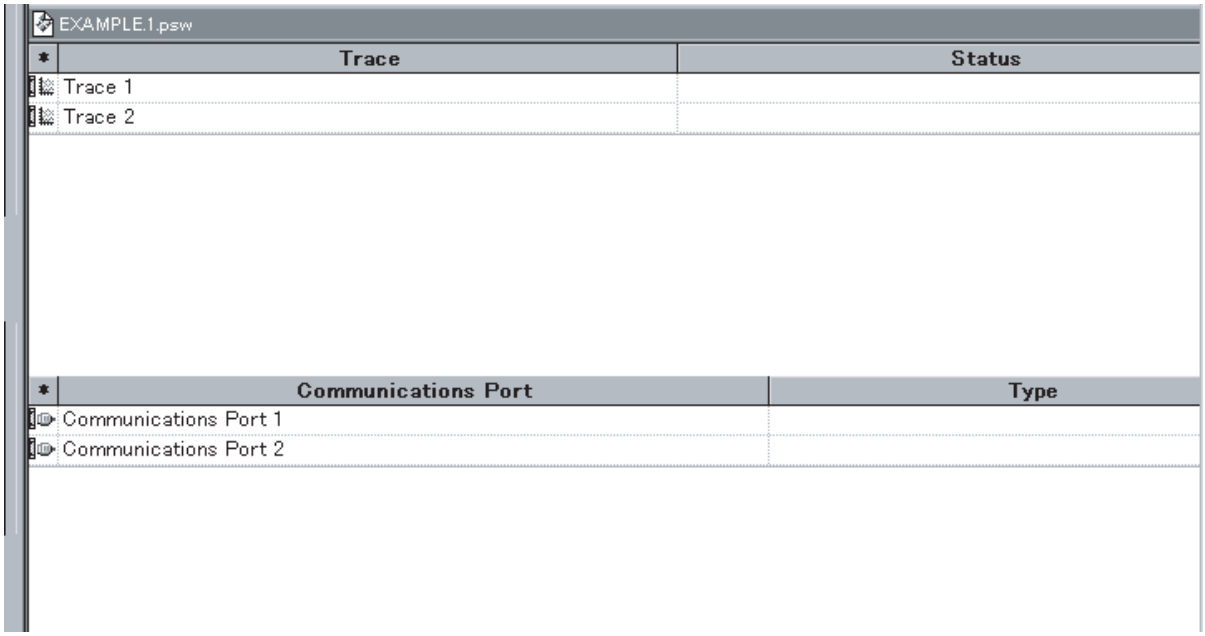

3. Double-click the **Communications Port** Icon, or right-click the **Communications Port** Icon and select **Edit Communications Port Settings** from the pop-up menu. Alternatively, left-click the **Communications Port** Icon and select **Edit Communications Port Settings** from the **PLC** Menu. The **Communications Port Settings** Dialog Box will be displayed with **Port 1/2** if the CS/CJ is used and **Port A/B** if the C200HX/HG/HE is used. These Dialog Boxes are the same in appearance.

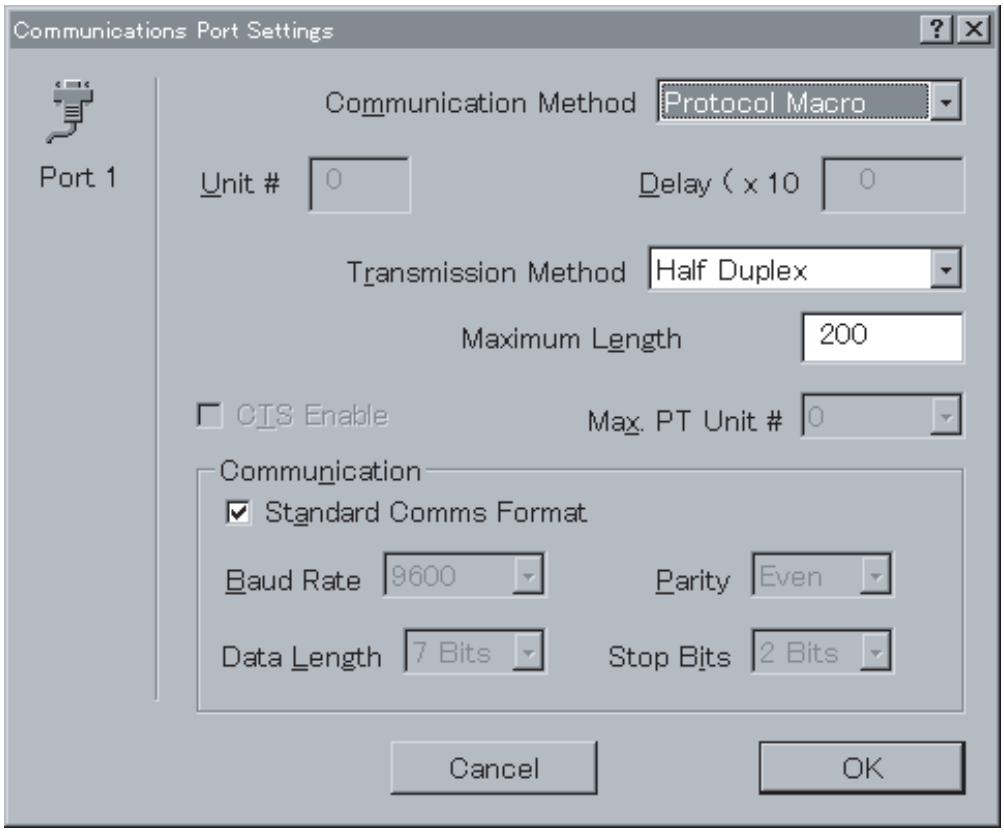

4. Set the **Communication Method** Field to **Protocol Macro**.
5. If the standard communications conditions are used, leave the **Standard Comms Format** check box in the **Communication** Field as is.

   If the communications conditions are changed, turn OFF the check mark of the check box and set the baud rate, data length, parity, and number of stop bits.
6. Left-click the **OK** Button to enter the settings. Left-click the **Cancel** Button to leave the settings unchanged.

Note If the PLC is CS/CJ and the **Communication Method** Field is set to **Protocol Macro**, a communications baud rate higher than that designated by the protocol macro specifications (38,400 bps max.) can be set. However, if this setting is actually made, a PLC Setup error will occur, and the CS/CJ will operate at the default baud rate of 9,600 bps.

10-7 Transfer of Communications Port Setting Data to PLC

10-7-1 Transfer of Communications Port Setting Data to PLC

Use the following procedure to transfer the data on the communications port settings in the PMSU to the PLC.

1,2,3...

1. Connect the personal computer to the PLC for online communications.
2. Set the PLC to **PROGRAM** mode.
3. Left-click the **PMSU** Icon for the corresponding communications port or left-click the desired **Communications Port** Icon. If a **PMSU** Icon is selected, data on the settings of both communications ports will be transferred. If a **Communications Port** Icon is selected, the settings for that communications port will be transferred.

4. Left-click the **Download Communications Port Setting** Icon from the toolbar, or right-click and select **Download Communications Port Setting** from the pop-up menu. Alternatively, select **Download Communications Port Setting** from the **PLC** Menu after selecting the desired communications port.
5. On completion of the transfer, the message **Communications port setting download completed** will be displayed. Left-click the **OK** Button.

⚠ **Caution** Confirm that no adverse effect will occur in the system before changing the operating mode of the CPU Unit. Not doing so may result in an unexpected operation.

⚠ **Caution** Confirm that no adverse effect will occur in the system before transferring the communications port A/B settings to the Protocol Macro Support Unit (PMSU). Not doing so may result in an unexpected operation.

10-7-2 Reading Communications Port Setting Data from PLC

Use the following procedure to read the data on the communications port settings in the PMSU from the PLC.

1,2,3...

1. Connect the personal computer to the PLC for online communications.
2. Set the PLC to **PROGRAM** mode.
3. Left-click the **PMSU** Icon for the corresponding communications port or left-click the desired communications port. If a **PMSU** Icon is selected, data on the settings of both communications ports will be read. If a communications port is selected, the settings in the corresponding communications port will be read.

4. Left-click the **Upload Communications Port Setting** Icon from the toolbar, or right-click and select **Upload Communications Port Setting** from the pop-up menu. Alternatively, select **Upload Communications Port Setting** from the **PLC** Menu after selecting the communications port.
5. On completion of the transfer, the message **Communications port settings upload completed**. will be displayed. Left-click the **OK** Button.

Note Use the above procedures to read and write data from and to the following areas of the CPU Unit.

- CS/CJ
  Board: D32000 to D32009 (port 1) and D32010 to D32019 (port 2)
  Unit: m to m + 9 (port 1) and m + 10 to m + 19 (port 2)
  [m = D 30000 + 100 x Unit No.] (Unit No. 0 to F (15))
- C200HX/HG/HE
  PLC Setup data in DM 6550 to DM 6654 (port B) and DM 6555 to DM 6559 (port A)
  Data can be read and written from and to the above areas with a Programming Device of the PLC or the PLC memory window of CX-Protocol. Refer to *12-2 Outline of PLC Memory Window* for details.

SECTION 11
Protocol Data Transferring and Printing

This section describes details of the transferring, converting, and printing of protocol data.

11-1 Transferring and Reading Protocol Data between the Computer and PMSU 286
- 11-1-1 Transferring Data from the Computer to the PMSU 286
- 11-1-2 Displaying Protocol Data within the PMSU 287
- 11-1-3 Transferring Protocol Data from the PMSU to the Computer 288

11-2 Printing Protocols 291
- 11-2-1 Setting the Printer. 292
- 11-2-2 Printing a Protocol 292

11-3 Importing Protocol Data from PST/PSS Files 293

11-4 CS/CJ Protocol and C200HX/HG/HE Protocol 295
- 11-4-1 Downloading the Protocol 295
- 11-4-2 Converting the I/O Memory Area 295
- 11-4-3 Converting C200HX/HG/HE Protocol into CS/CJ Protocol 296

11-1 Transferring and Reading Protocol Data between the Computer and PMSU

11-1-1 Transferring Data from the Computer to the PMSU

⚠ **Caution** Confirm safety at the destination node before transferring a protocol to another node or editing the I/O area. Doing either of these without confirming safety may result in injury.

⚠ **Caution** Confirm that no adverse effect will occur in the system before changing the operating mode of the CPU Unit. Not doing so may result in an unexpected operation.

⚠ **Caution** Check the user protocol for proper execution before actually running it in the Unit. Not checking the protocol may result in an unexpected operation.

Use the following procedure to download protocols to the PMSU from the computer.

1,2,3...

1. Connect to the PLC online and set the PLC operating mode to **Program** mode.
2. Double-click the **Protocol List** Icon in the project workspace (left pane) to list the protocols in the project window (right pane).
3. Select a protocol to download. More than one protocol can be selected by pressing the **Shift** Key and selecting another protocol to extend the selection or by pressing the **Ctrl** Key and selecting another protocol to add to the selection.

4. Select **Download Protocols** from the **Protocol** Menu or left-click the **Download Protocol** Icon on the toolbar.
   The **Protocol Compile/Download** Dialog Box will be displayed.

   Note Transfer a protocol to the PMSU only after selecting a protocol.

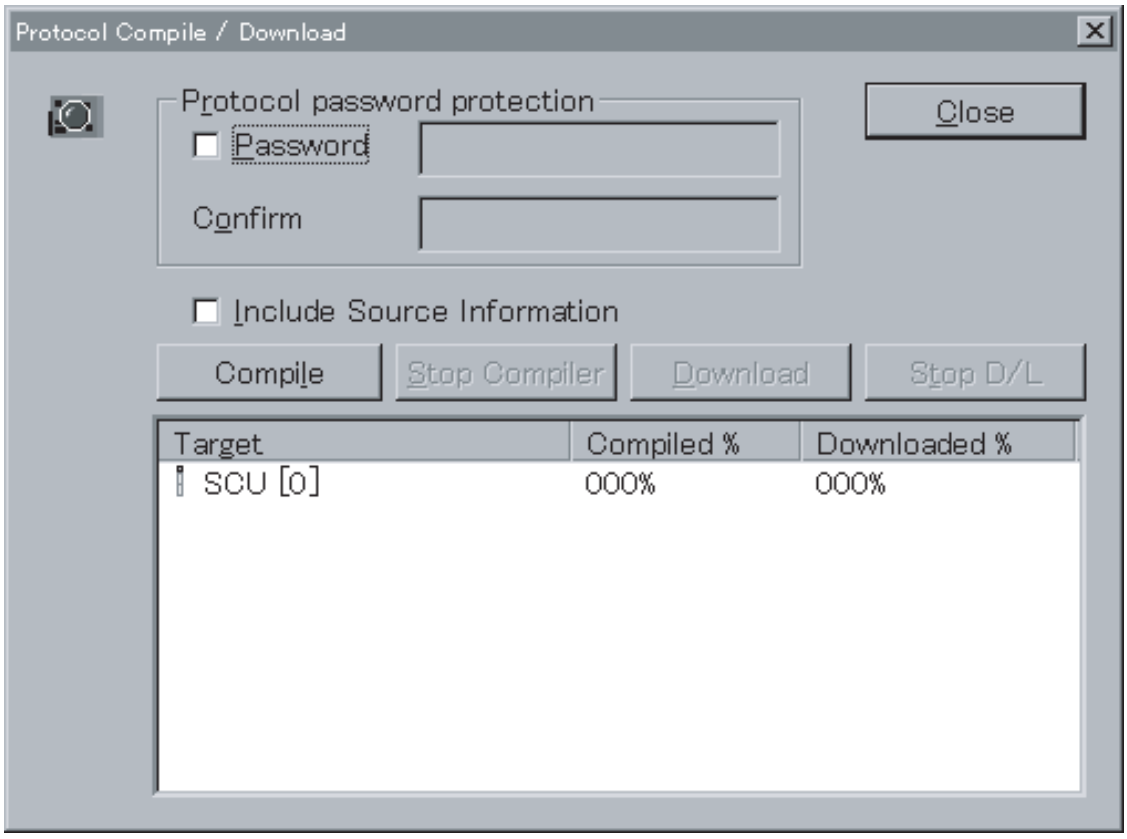

5. Prior to download, a password can be applied to protect the protocol. Select the **Protocol password protection** check box to enable password protection. Enter a password in the **Password** Field (up to eight characters). Enter the password in the **Confirm** Field.
6. When adding a source code, select **Include Source Information**. If the source code is not to be added, the amount of data transferred to the PMSU will be small, but the protocol data that is read to the personal computer when performing read **(PLC to computer)** will vary. Refer to the note on page 291.
7. Left-click the **Compile** Button. Errors or alarms that occurred during compiling will be displayed in the output window (bottom left of the screen).
8. When the compile is normally completed, the **Download** Button will become active. Left-click this button. Transfer status will be displayed on the indicator. Press the **Download Cancel** Button to stop transfer processing.
9. When the transfer is completed, the message **Download Completed OK** will be displayed. Left-click the **OK** Button.
10. Close the **Protocol Compile/Download** Dialog Box.

11-1-2 Displaying Protocol Data within the PMSU

Use the following procedure to display protocol data within the PMSU.

1,2,3...

1. Connect to the PLC online.

2. Double-click the **PLC** Icon.

3. Left-click the **PMSU** Icon in the project workspace (left pane) or in the project window (right pane), and then right-click to display a pop-up menu. Select **Upload Protocol List** from the pop-up menu.

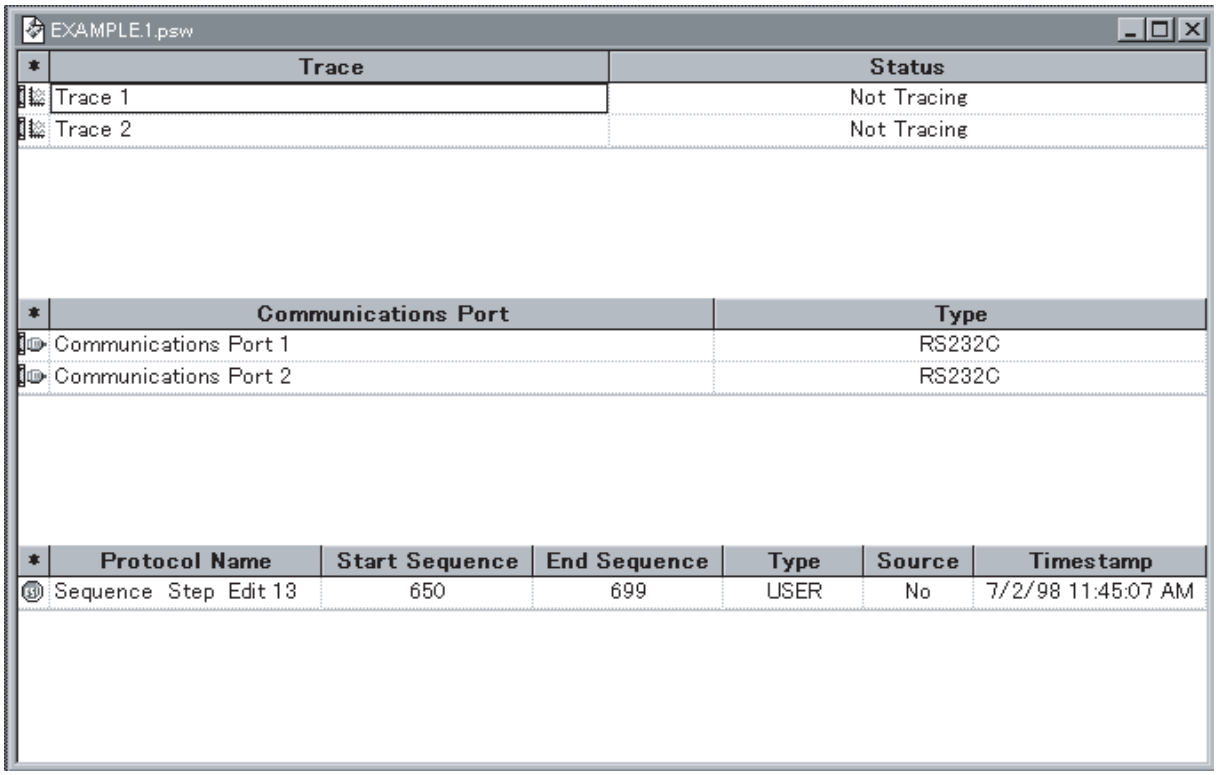

The trace, communications port, and protocol list will be displayed in the Project Window.

11-1-3 Transferring Protocol Data from the PMSU to the Computer

Use the following procedure to upload protocol data to the computer from the PMSU.

1,2,3...

1. Connect to the PLC online.

2. Double-click the **PLC** Icon.

3. Left-click the **PMSU** Icon in the project workspace (left pane) or in the project window (right pane) and then right-click to display a pop-up menu. Alternatively, select **Upload Protocol** from the pop-up menu or left-click the **Upload Protocol** Icon.

   If protocol data is transferred with the password protection, input a password prior to uploading protocol data.

   A message indicating that protocol data is being transferred and the progress will be displayed on the status bar.

   When transfer is completed, the message **Decompiler Compiled OK** will be displayed. Left-click the **OK** Button.

The transferred protocol data will be displayed in the project workspace (left pane) with date and time of the transfer displayed after **Uploaded Protocols.**

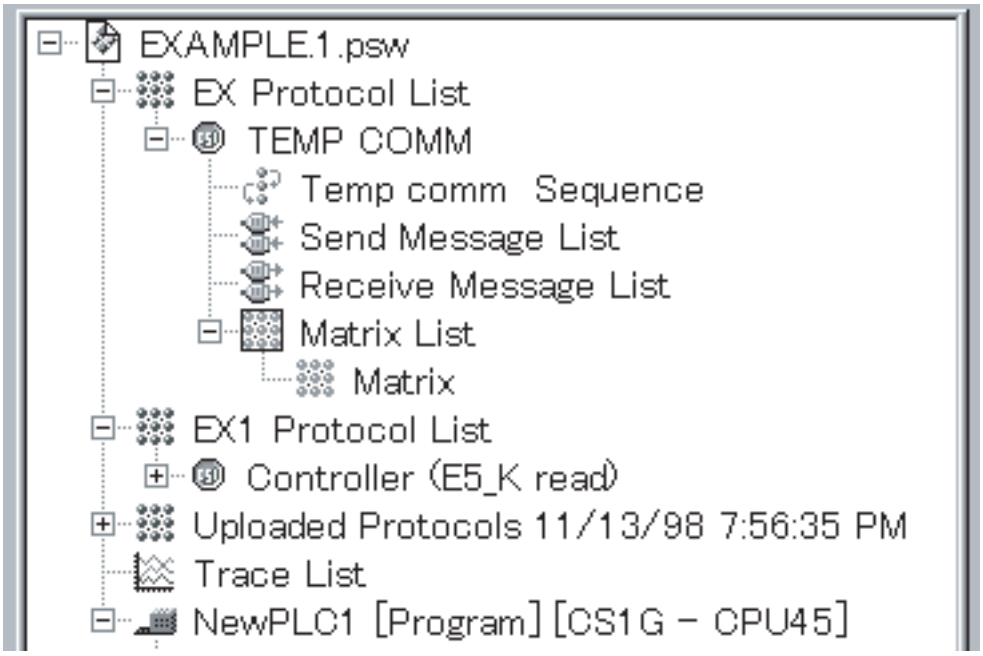

Comparing Protocols in Boards/Units with Protocols in Projects

This function compares the protocols in one Board or Unit with the protocols in a project. It is also possible to compare the protocols of multiple Boards or Units at the same time with the protocols in the project.

Use the following procedure to compare the protocols.

1,2,3...

1. Connect online to the PLC.
2. Double-click the Protocol List Icon in the Project Workspace on the left.
   The protocols will be displayed in the Project Workspace on the right.
3. Specify the protocols to compare with the protocols in the Board or Unit. When selecting more than one protocol, hold down the Shift Key to select a range or hold down the Ctrl Key to add protocols.
   It is also possible to select more than one Board/Unit at the same time.

   Note Select all of the protocols in the Board/Unit being compared. If the number of protocols does not match the number selected, the comparison will fail.
4. Select ***Protocols - Compare Protocols*** from the menu bar, or click the Protocol Comparison Icon in the toolbar. The Protocol Compile/Compare Dialog Box will be displayed.

Note Perform the operation to compare protocols in the Board/Unit only after selecting the protocols.

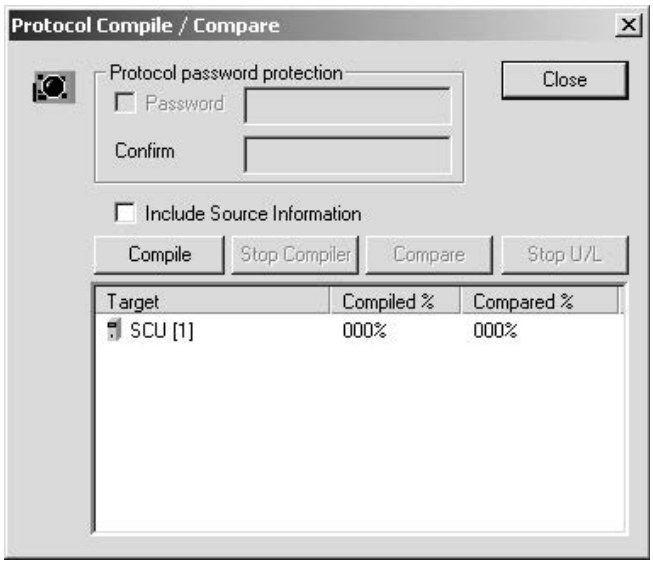

5. If the source code was also transferred with the protocols the last time the protocols were transferred to the Board/Unit, select the *Include Source Information* Option.
6. Click the **Compile** Button. Errors, warnings, and other information during compilation will be displayed in the Output Window at the lower left.
7. If compilation ends normally, the **Compare** Button will be enabled. Click the **Compare** Button. The protocols will be read from the Board/Unit for comparison. An indicator will be displayed in the status bar while the data is being read. The comparison can be canceled at this time by clicking the **Stop U/L** Button.
8. When the comparison ends, the Compare Result Dialog Box will be displayed.

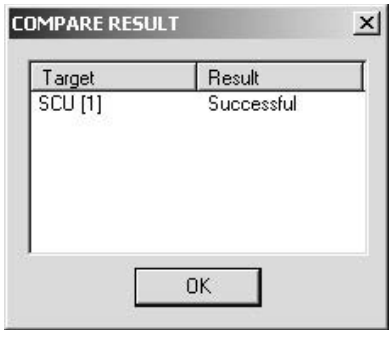

The possible causes for a comparison to fail are given in the following table.

Cause	Correction
The option to include the source code was selected, but the source code is not included with the protocols in the Board/Unit.	Clear the option to include the source code and repeat the procedure from step 6.
The option to include the source code was not selected, but the source code is included with the protocols in the Board/Unit.	Select the option to include the source code and repeat the procedure from step 6.

Cause	Correction
The number of protocols selected in step 3 does not agree with the number of protocols in the Board/Unit.	Perform the procedure in *11-1-2 Displaying Protocol Data within the PMSU* and check to see if the number of protocols is the same.
The names of the protocols selected in step 3 do not agree with names of the protocols in the Board/Unit.	Perform the procedure in *11-1-2 Displaying Protocol Data within the PMSU* and check to see if the names of protocols are the same.
The sequences, steps, or messages in the protocols are different.	Perform the procedure in *11-1-3 Transferring Protocol Data from the PMSU to the Computer* and check the sequences, steps, and messages in the protocols.

Note If the source code is not included with the protocol data and the data format of each message item is set to the constant control code/ASCII format, that portion will be displayed as follows:

Item	With source code	Without source code
Protocol name	Same as when transferring from **computer to PLC**.	Same as when transferring from **computer to PLC**.
Sequence name	Same as when transferring from **computer to PLC**.	Allocated automatically. (NewSequence 1, NewSequence 2, etc.)
Send message name	Same as when transferring from **computer to PLC**.	Allocated automatically. (SD(0)_1, SD(1)_1, etc.)
Receive message name	Same as when transferring from **computer to PLC**.	Allocated automatically. (RV(2)_1, RV(3)_1, etc.)
Matrix name	Same as when transferring from **computer to PLC**.	Allocated automatically. (Matrix, Matrix 1 etc.)
Constraint attributes in the message	Same as when transferring from **computer to PLC**.	Allocated automatically.

<u>00 Hexadecimal to 1F Hexadecimal (Control Code)</u>
Example:
00 Hexadecimal to NUL
1F Hexadecimal to US

<u>20 Hexadecimal to 7E Hexadecimal (ASCII Format)</u>
Example:
“@” to “@”
[31] to “1”

<u>7F Hexadecimal (Control Code)</u>
Example:
[7F] to DEL
DEL to DEL

<u>80 Hexadecimal to FF Hexadecimal (Hexadecimal Format)</u>
Example:
[80] to [80]
[FF] to [80]

11-2 Printing Protocols

Each protocol can be printed with the following contents.

1,2,3...
1. Sequence number, sequence name, each sequence settings.
2. Settings of all the steps (in table format)

3. Send/receive message name and message settings.
4. Matrix name and contents of the matrix case.

11-2-1 Setting the Printer

Set the printer settings using the **Print Setup** Dialog Box. With the CX-Protocol, use the following procedure.

1,2,3...

1. Select **Print Setup** from the **File** Menu.
2. The **Print Setup** Dialog Box will be displayed. Select a printer from the **Name** drop-down list. Use the **Properties** Button to set the printer.
3. Select a paper size from the **Paper** drop-down list in the **Base** Field.
4. Select a paper feed method from the **Paper Source** drop-down list.
5. Select either **Port** or **Land** in the **Paper** Field.
6. Left-click the **OK** Button to confirm the settings or the **Cancel** Button to leave the settings unchanged.

For further details about the printer settings, refer to the instruction manual of the printer.

11-2-2 Printing a Protocol

Use the following procedure to print a protocol.

1,2,3...

1. Double-click the **Protocol List** Icon to list the protocols in the project window (right pane).
2. Select a protocol to print. More than one protocol can be selected for printing by pressing the **Shift** Key and selecting another protocol to extend the selection or by pressing the **Ctrl** Key and selecting another protocol to add to the selection.
3. Printout images of protocols can be previewed by right-clicking and selecting **Print**, then **Print Preview** from the pop-up menu. The preview window will be displayed and the desired protocol can be previewed. The selection can also be made from the **File** Menu. The following functions are available.
   - Press the **Next Page** Button or **Prev Page** Button to navigate through the pages of the print-out.
   - Press the **Two Page** Button to view two pages of the print-out at once. This button will then change to the **One Page** Button to revert back.
   - Press the **Zoom In** Button and the **Zoom Out** Button to zoom in and out of the print-out.
   - Press the **Close** Button to close the dialog box.
   - Press the **Print** Button from the toolbar to display the **Print** Dialog Box.

   After designating the printer name, printing range, number of copies, left-click the **OK** Button to print the data.

4. Alternatively, right-click to display a pop-up menu and select **Print** from the **Print** Menu or left-click the **Print** Icon on the toolbar. **Print** can also be selected from the **File** Menu.
5. The **Print** Dialog Box will be displayed. Set the printer name, printing range, and number of copies. Press the **OK** Button to print the data.
6. Printing will start.

   Printout example of protocol data is as shown below.

Protocol: Hayes modem AT commands [Comm Sequences]

Comm sequence No.: 570 Comm sequence name: Modem initialize (MD144FB5V)
Link words: INarea1: --- Naddr1: --- INlen1: --- OUTarea1: --- OUTacdr1: --- OUTlen1 ---
INarea2: --- Naddr2: --- INlen2: --- OUTarea2: --- OUTacdr2: --- OUTlen2 ---
Control parameter: RTS/CTS Control: Receive XON/XOFF Control: ---------- Modem control: Yes
Delimiter: Send code: ---------- Receive code: ----------
Contention: Send request code: ----------
Recv wait time: 10 sec Recv finish time: --- Send finish time: --- Response method: Scan

No.	Repeat	Command	Retry	Send/Wait	Send Message	Receive Message	Rsp	Next	Error
00	RSET/001	Send & Receive	0	---	MD144FB5V	<Initial-R1>	No	Matrix	Goto 1
01	RSET/001	Send & Receive	0	1 sec	MD144FB5V	<Initial-R2>	No	Matrix	Goto 2
02	RSET/001	Send & Receive	0	1 sec	MD144FB5V	<Initial-R3>	No	Matrix	Abort

Comm sequence No.: 571 Comm sequence name: Dial (MD144FB5V)
Link words: INarea1: --- Naddr1: --- INlen1: --- OUTarea1: --- OUTacdr1: --- OUTlen1 ---
INarea2: --- Naddr2: --- INlen2: --- OUTarea2: --- OUTacdr2: --- OUTlen2 ---
Control parameter: RTS/CTS Control: Receive XON/XOFF Control: ---------- Modem control: Yes
Delimiter: Send code: ---------- Receive code: ----------
Contention: Send request code: ----------
Recv wait time: 90 sec Recv finish time: --- Send finish time: --- Response method: Scan

No.	Repeat	Command	Retry	Send/Wait	Send Message	Receive Message	Rsp	Next	Error
00	RSET/001	Send & Receive	0	---	Dail (S)	<MD144FB-R1>	No	Matrix	Goto 1
01	RSET/001	Send & Receive	0	90 sec	Dail (S)	<MD144FB-R2>	No	Matrix	Goto 2
02	RSET/001	Send & Receive	0	90 sec	Dail (S)	<MD144FB-R3>	No	Matrix	Abort

Note Message data may extend beyond the printing frame depending on its length. If this happens, select **Print Setup** from the **File** Menu and change the printing setting to landscape or change the printer type.

11-3 Importing Protocol Data from PST/PSS Files

With the CX-Protocol, SYSMAC-PST and PSS (DOS version) file data can be imported. However, the imported PSS files cannot be edited with the CX-Protocol. Copy the data into the project and then edit the data. (Copying is only possible for PST project files and PSS protocol files.)

The following files can be imported.

Type of PSS files	Description	File extension
PST project files	SYSMAC-PST projects	*.psw
PSS system setting files	PMSU communications port (A, B) setting data	*.pts
PSS protocol files	Only PSS protocol data	*.pt1
PSS trace data files	Only PSS or SYSMAC-PST trace data	*.ptr

Use the following procedure to import a SYSMAC-PST project file.

1,2,3...

1. Select **Open** from the **File** Menu or left-click the **Open** Icon on the toolbar. Alternatively, the file can be opened by pressing the **Ctrl**+**O** Keys.
2. The **Open** Dialog Box will be displayed.
   Select a SYSMAC-PST project file from the list in the **Open** Dialog Box.
3. Left-click the **Open** Button or double left-click the selected project to convert the SYSMAC-PST project file into one that can be edited with the CX-Protocol. The message, **Convert old file** will be displayed. Left-click the **OK** Button.
4. If there is no setting for PLC model in the SYSMAC-PST project file to be imported, set applicable PLC model and communications settings. Left-click the **OK** Button. The data can be edited with the CX-Protocol. The pro-

tocol attribute will change to C200HX/HG/HE. Refer to *11-4 CS/CJ Protocol and C200HX/HG/HE Protocol* for protocol attributes.

Note When **Save** is left-clicked to save the imported file, it will be saved as a CX-Protocol file. Once it is saved, the file cannot be read with the SYSMAC-PST. Therefore, if the file needs to be saved as a SYSMAC-PST file, select **Save As** and enter a different name.
When **Save** is selected, a confirmation dialog box will be displayed. Left-click the **OK** Button if the data can be overwritten.

Use the following procedure to import data from a PSS file.

1,2,3...

1. Select **Open** from the **File** Menu or left-click the **Open** Icon on the toolbar. Alternatively, the file can be opened by pressing the **Ctrl**+**O** Keys.
2. The **Open** Dialog Box will be displayed.
   Select a file type from the **Type of File** drop-down list box.
3. Select a PSS file from the list in the **Open** Dialog Box. The current folder can be modified by selecting another folder from the **Look in** drop-down list.
4. Left-click the **Open** Button or double-click the selected file to open the file. The contents of the PSS file will be displayed in the project window (right pane).

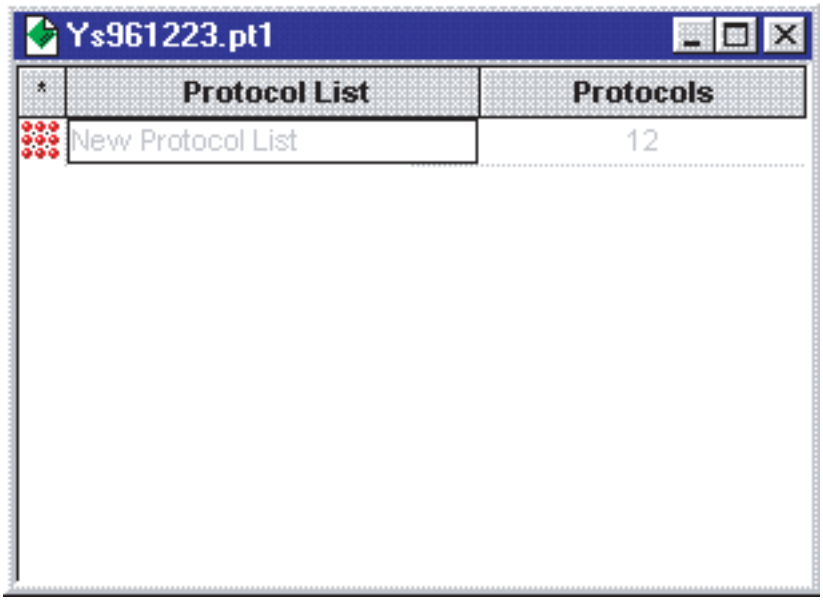

Note

1. This data cannot be edited with the CX-Protocol. Copy it once and paste it into another project window to edit the data.
2. The data imported from the PSS system setting file cannot be copied to the communications port for the CX-Protocol.

11-4 CS/CJ Protocol and C200HX/HG/HE Protocol

The protocol macro for the CS/CJ-series PLCs is called the "CS/CJ Protocol" and the protocol macro for the C200HX/HG/HE PLCs is called the "C200HX/HG/HE Protocol." With the CX-Protocol, the C200HX/HG/HE Protocol created with the SYSMAC-PST can be downloaded to a CS/CJ PMSU so that it can be used with the CS/CJ. In this case, the I/O memory area will be converted to one for the CS-series. In the same manner, the CS-series Protocol can be downloaded so that it can be used with a C200HX/HG/HE PSB.

With the CX-Protocol, either the CS/CJ Protocol or C200HX/HG/HE Protocol can be selected when creating a new project file.

Since the commands and I/O memory area designation are different between the CS/CJ Protocol and C200HX/HG/HE Protocol, observe the following precautions when downloading the protocol.

The standard system protocol of the CX-Protocol is provided with the CS/CJ Protocol.

11-4-1 Downloading the Protocol

Transferring C200HX/HG/HE Protocol to CS/CJ (CS/CJ Protocol) PMSU

The C200HX/HG/HE Protocol can be transferred to the Serial Communications Board/Unit for CS/CJ by setting the PLC model to the CS/CJ Series, and setting the target for the protocol to the CS/CJ Serial Communications Board/Unit.

The I/O memory area will be converted to one for the CS/CJ. Refer to the following section for further details about conversion.

If C200HX/HG/HE Protocol is used as CS/CJ Protocol, there will be limitations in the use of EM (expanded data memory). It is recommended that CS/CJ Protocol be used from the start.

Transferring CS/CJ Protocol to C200HX/HG/HE PMSU

The CS/CJ Protocol can be transferred to the Communications Board for C200HX/HG/HE by setting the PLC model to the C200HX/HG/HE, and setting the target for the protocol to the Communications Board.

The I/O memory area will be converted to one for the C200HX/HG/HE. Refer to the following section for further details about conversion.

If CS/CJ Protocol is used as C200HX/HG/HE Protocol, there will be limitations in the use of commands and I/O memory area. It is recommended that C200HX/HG/HE Protocol be used from the start.

11-4-2 Converting the I/O Memory Area

The I/O memory area will be converted as shown below when the CS/CJ Protocol is converted into the C200HX/HG/HE Protocol or vice versa.

CS/CJ Protocol	C200HX/HG/HE Protocol
H (Holding relay)	HR (Holding relay)
W (Internal auxiliary relay)	LR (Link relay)
A (Special auxiliary relay)	AR (Auxiliary memory relay)
D (Data memory)	DM (Data memory)
E (Expanded data memory)	EM (Expanded data memory)

When converting the CS/CJ Protocol into the C200HX/HG/HE Protocol, the commands (Wait, Flush, Open, or Close) and the check codes (LRC2, SUM1 (1 byte/2 bytes)) used exclusively for the CS/CJ Protocol will cause errors during compilation. Therefore, create a protocol without using them.

If the I/O memory area extends beyond that for the C200HX/HG/HE, an error will occur. If so, correct the protocol.

11-4-3 Converting C200HX/HG/HE Protocol into CS/CJ Protocol

Download the C200HX/HG/HE Protocol with source code to the CS/CJ PMSU and upload the protocol to change its attributes to those for the CS/CJ Protocol.

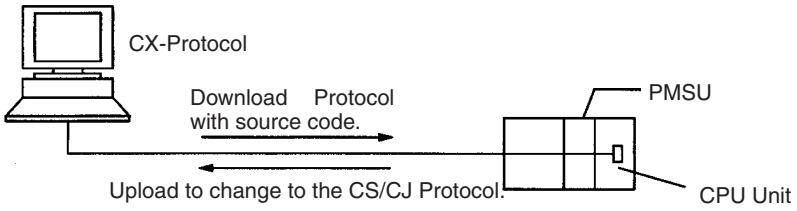

SECTION 12
Tracing and Monitoring

This section describes details of PLC memory area monitoring and the transmission line tracing.

12-1 Tracing Transmission Lines 298
12-1-1 Tracing Method 299
12-1-2 Trace-related Bits 300
12-1-3 Starting and Stopping a Trace 300
12-1-4 Reading Trace Data from PMSU 301
12-1-5 Adding and Saving Trace Data to Project File 301
12-1-6 Retrieving Trace Data 301
12-1-7 Printing Trace Data 302
12-2 Outline of PLC Memory Window 302
12-2-1 PLC Memory Window and PLC Data Table 302
12-2-2 Main Functions 303
12-2-3 List of Areas 303
12-2-4 Starting and Quitting PLC Memory Window 303
12-2-5 Changing Display and Input Formats 305
12-2-6 PLC Memory Window Settings 306
12-3 I/O Memory Display and Editing 309
12-3-1 Displaying I/O Memory 309
12-3-2 Editing I/O Memory Data 309
12-3-3 Writing Same Data to Successive Addresses 310
12-4 I/O Memory Monitor 312
12-4-1 Monitoring Whole I/O Memory 313
12-4-2 Address Monitor 314
12-4-3 Finding Force-set or Force-reset Bits 316
12-5 I/O Memory Transfer and Comparison 317
12-5-1 Precautions for Transfer of Data to PLC 317
12-5-2 Data Transfer 318
12-5-3 Comparison with Data in PLC 319

12-1 Tracing Transmission Lines

Transmission or reception data and signals of a maximum of 670 characters that the Board or Unit exchanges with external devices can be traced if the PLC is the C200HX/HG/HE. Transmission or reception data and signals of a maximum of 1,700 characters can be traced if the PLC is the CS/CJ.

By tracing the transmission or reception data and signals, the contents of each message transmitted or received per step can be checked and compared with the preset sequence. The results of tracing can be saved as data in project files or printed.

The following types of data can be traced.

Data type	Display	
Send message	Character strings	Send and receive messages of a maximum of 670 characters (with C200HX/HG/HE) and a maximum of 1,700 characters (with CS/CJ)
	Hexadecimal data	
Receive message	Character strings	
	Hexadecimal data	
Sequence No.	0 to 999 (CS/CJ only)	
Step No.	0 to 15	
Control signal	ON/OFF transitions of RTS, CTS, DTR, and DSR signals	
Communications error (CS/CJ only)	Parity error (P), framing error (F), and overrun error (O)	

CS/CJ Tracing Screen

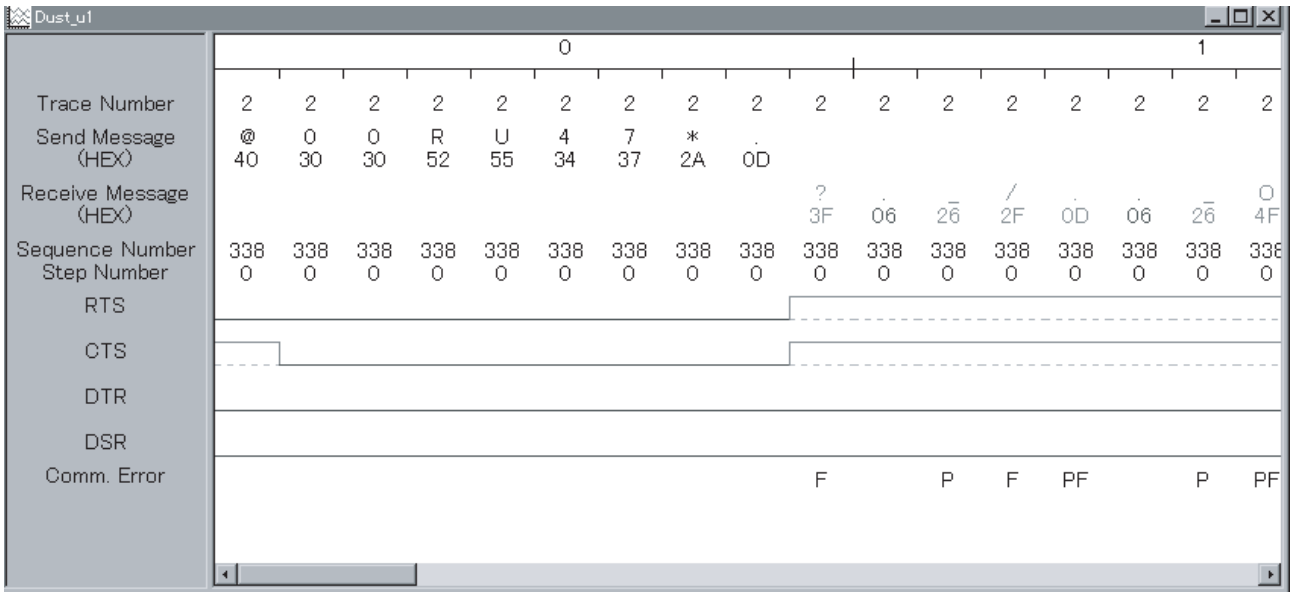

C200HX/HG/HE Tracing Screen

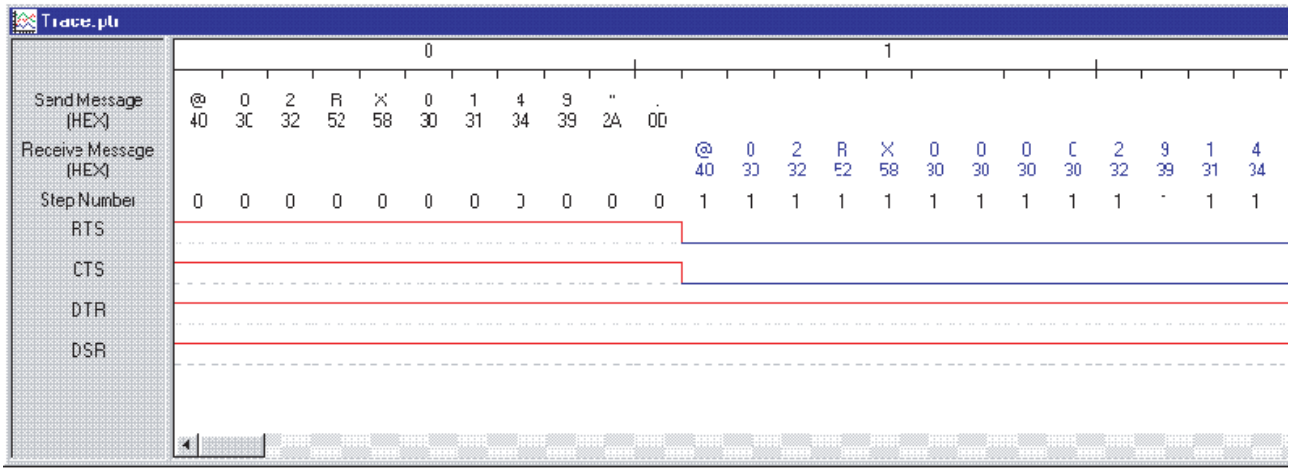

- Transmission or reception data and signals are traced from left to right starting from the leftmost point.
- The figures at the top row represent 10-byte units.
- The send message is shown above and the receive message below. Both send and receive messages are in ASCII statements followed by hexadecimal data.
- The step number is displayed. If the PLC is the C200HX/HG/HE, the letter "e" or "f" will be displayed in the step number.
- The RTS, CTS, DTR, and DSR signals are indicated in red above the dotted baseline and in blue below the dotted baseline.
- In addition to the above tracing items, the trace number, execution sequence number, and communications error will be displayed if the PLC is the CS/CJ. The trace number changes with the change of the sequence number.
  If a communications error occurs, the screen will display the letter "P," "F," or "O."

Note

1. The ON or OFF state of the control signal is not sampled correctly. Use the state result for reference only.
   The sampling of the ON or OFF states of the RTS, CTS, DTR, and DSR signals starts when the transmission or reception of a single character of data has been completed. Changes in signals without transmission or reception data or changes in signals while a single character is being transmitted or received are not sampled.
   The ON or OFF state of the CTS or DSR signal may differ depending on whether the transmission has been completed or not.
2. Provided that the PLC is the CS/CJ, the screen will display "---" as both the sequence number and step number when a message is received before the execution of the sequence.
3. If the PLC model is the CS/CJ, the displayed position of the sequence or step number may shift forward or backwards or "---" may be displayed instead when transmission and reception data and signals are traced at a baud rate of 19,200 bps or higher. This is due to the data collection performance of the tracing function.

12-1-1 Tracing Method

The following two tracing methods are available.

Continuous Traces

The trace is executed until stopped. When the PMSU trace buffer becomes full during tracing, data will be discarded starting from the oldest data.

One-shot Traces The trace is terminated when the trace buffer becomes full. The entire trace data from the start of trace remains in the PMSU trace buffer.

12-1-2 Trace-related Bits

Trace-related flags are listed in the following table.
n = 1500 + 25 × Unit No. (words)

CS/CJ

Flag	Port	Effective address	State
Continuous Trade Start/Stop Bit	Port 1	190001 Word n bit 01	The continuous trace starts on the rising edge and the trace is terminated on the falling edge. This bit is invalid during one-shot traces.
	Port 2	190009 Word n bit 09	
One-shot Trace Start/Stop Bit	Port 1	190002 Word n bit 02	The one-shot trace starts on the rising edge and is terminated on the falling edge. This bit is invalid during continuous traces.
	Port 2	190010 Word n bit 10	
Trace Execution/ Completion Flag	Port 1	190912 Word n+9 bit 12	ON: Continuous or one-shot trace being executed. OFF: One-shot trace is stopped by a full buffer when One-shot Trace Start/Stop Bit is still ON.
	Port 2	191912 Word n+19 bit 12	

C200HX/HG/HE

Flag	Port	Effective address	State
Continuous Trade Start/Stop Bit	Port A	28902	The continuous trace starts on the rising edge and the trace is terminated on the falling edge. This bit is invalid during one-shot traces.
	Port B	28903	
One-shot Trace Start/Stop Bit	Port A	28904	The one-shot trace starts on the rising edge and is terminated on the falling edge. This bit is invalid during continuous traces.
	Port B	28905	
Trace Execution/ Completion Flag	Port A	28600	ON: Continuous or one-shot trace being executed. OFF: One-shot trace is stopped by a full buffer when One-shot Trace Start/Stop Bit is still ON.
	Port B	28601	

12-1-3 Starting and Stopping a Trace

Use the following procedure to start and stop a trace.

1,2,3...

1. Connect the PLC for online communications and set the PLC to **Monitor** mode.

2. Double-click the **PLC** Icon.
3. Either left-click the **PMSU** Icon of the communications port to be traced in the project workspace (left pane) or double-click the **PMSU** Icon in the project window (right pane).

4. Left-click the **Trace 1** or **Trace 2** for the CS/CJ and **Trace A** or **Trace B** for the C200HX/HG/HE to select a desired item. Right-click to display a pop-up Menu and point to **Start Trace** and select **Continuous Trace** or **One-shot Trace** from the submenu. Alternatively, left-click the **Start Continuous Trace** Icon or **Start One-shot Trace** Icon on the toolbar. It can also be selected from the **PLC** Menu.

   Tracing conditions of the Communications Board will be displayed on the **Status** Field. Once the trace is started, **Performing Continuous Trace** or **Performing One-shot Trace** will be displayed. When the trace is stopped, **Trace Stop** will be displayed.

5. To stop tracing, left-click the **Trace 1** or **Trace 2** for the CS/CJ and **Trace A** or **Trace B** for the C200HX/HG/HE to select a desired item. Right-click to display a pop-up menu and select **Stop Trace** from the pop-up menu. Alternatively, left-click the **Stop Trace** Icon on the toolbar. It can also be selected from the **PLC** Menu.

12-1-4 Reading Trace Data from PMSU

The trade data in the buffer of the PMSU can be uploaded to the project by using the following procedure.

1,2,3...

1. Connect the PLC for online communications and set the PLC to **Monitor** mode or **Program** mode.
2. Double-click the **PLC** Icon.

3. Left-click the **PMSU** Icon for the communications port to be traced in the project workspace (i.e., the left pane of the window) or double-click the **PMSU** Icon in the project window (i.e., the right pane).
4. Left-click and select the **Trace 1** or **Trace 2** Icon if the PLC is the CS/CJ or **Trace A** or **Trace B** Icon if the PLC is the C200HX/HG/HE. Right-click and select **Trace transfer (PLC to personal computer)** from the pop-up menu. Alternatively, left-click the **Trace transfer (PLC to personal computer)** from the toolbar or select the same item from the PLC Menu.

The selected trace data will be displayed. Use the scroll bar on the bottom of the window in order to scroll the trace data left and right.

12-1-5 Adding and Saving Trace Data to Project File

An uploaded trace can be added to and saved as part of a project by using the following procedure.

1,2,3...

1. Upload the trace from the PMSU as described in *12-1-4 Reading Trace Data from PMSU*.
2. The trace will be displayed and automatically added to the project.
3. Select **Save** or **Save As** from the **File** Menu and save it as project file (*.psw).

Use the following procedure to add information to the properties of the trace.

1,2,3...

1. Right-click in the field where the trace is displayed. Select **Properties** from the pop-up menu. The **Trace Properties** Dialog Box be displayed.
2. Input the information on the trace and left-click the **OK** Button. Left-click the **Cancel** Button to close the dialog box without saving the information.

12-1-6 Retrieving Trace Data

Trace data can be retrieved from project files or from trace data files.

Retrieving Trace Data from Trace List of Project

Use the following procedure to retrieve trace data from the trace list in a project file.

1,2,3...

1. Left-click the **Project** Icon to show the trace list.
2. Left-click the **Trace List** Icon.
3. Double-click the desired trace within the trace list.

Retrieving Existing PSS Trace Data Files

Use the following procedure to open an existing PSS trace data file. The trace data retrieved from the file cannot be added to projects.

1,2,3...

1. Select **Open** from the **File** Menu or click on the **Open** Icon from the toolbar.
2. The **Open** Dialog Box will be displayed.
   Check that the **Files of type** Field is preset to **PSSDOS Trace Files (*.ptr)**. The current folder can be changed by selecting another folder from the **Look in** drop-down list.
3. Left-click the **Open** Button or double-click the selected trace data file to open the trace. In order to close the **Open** Dialog Box without the trace data file opened, left-click the **Cancel** Button.

12-1-7 Printing Trace Data

Traces can be printed directly from the CX-Protocol. Use the following procedure to print a trace.

1,2,3...

1. Double-click the **Trace List** Icon to list the traces in the project window (i.e., the right pane).
2. Double-click on a trace to display it.
3. If desired, the trace can be previewed by selecting **Print Preview** from the **File** Menu. The preview window will be displayed.
   - Select the **Next Page** Button or **Prev Page** Button to navigate through the pages of the printout.
   - Select the **Two Page** Button to view two pages of the printout at once. This button will change to the **One Page** Button to revert back.
   - Select the **Zoom In** Button or **Zoom Out** Button to zoom the printout image in or out.
   - Select the **Close** Button to close the dialog box.
   - The **Print** Dialog Box will be displayed by selecting the **Print** Button. Designate the printer name, print range, and number of copies and left-click the **OK** Button to print the trace.

4. Select **Print** from the **File** Menu or left-click the **Print** Icon from the toolbar.
5. The **Print** Dialog Box will be displayed. Designate the printer name, print range, and number of copies and left-click the **OK** Button to print the trace.
6. The printing of the trace will start. The following is an example printout of a trace.

Name: Aftergw1.psw Description: PORT-A

	0																		
Send Message (HEX)	5 35	4 34	4 34	A 41	* 2A	. 0D												@ 40	0 30
Receive Message (HEX)							@ 40	L 30	U 30	O 4F	U 55	I 54	B 42	4 34	C 43	* 2A	. 0D		
Step Number	0	0	0	0	0	0	1	1	1	1	1	1	1	1	1	1	1	0	0
RTS																			
CTS																			
DTR																			
DSR																			

12-2 Outline of PLC Memory Window

12-2-1 PLC Memory Window and PLC Data Table

The PLC memory window is used for displaying and editing I/O memory data, such as bit, timer/counter, and DM data.

The table-type window called the PLC data table, which has a list of data classified according to I/O memory area, will be displayed in the PLC memory window.

If the PLC is connected online, the I/O memory data of the PLC can be monitored. Furthermore, I/O memory data edited in the PLC memory window can be transferred to the PLC. The Board and Unit system settings can be performed and the data can be transferred to the PLC.

Note This window is not supported for an NJ-series CPU Unit.

Note
1. Do not monitor EM area used for file memory. If monitoring is performed for this area, it will become impossible to display any present values.
2. Each I/O memory area varies with the PLC or CPU model. For details, refer to the Operation Manual of the PLC in use.
3. All I/O memory data that can be transferred varies with the PLC mode. For details, refer to *12-5 I/O Memory Transfer and Comparison*.

12-2-2 Main Functions

The I/O memory window has the following main functions.

- I/O memory display
- I/O memory editing
- I/O memory monitor
- I/O memory data transfer (personal computer to PLC and vice versa)
- I/O memory data comparison

12-2-3 List of Areas

The following table shows a list of I/O memory areas that can be displayed or edited in the PLC memory window. The abbreviations in the table are used in the PLC memory window.

CS/CJ	C200HX/HG/HE
CIO: I/O Area, Work Area, Data Link Area, CPU Bus Area, Special I/O Unit Area, Inner Board Area, SYSMAC BUS Area, I/O Link Area, C200H Special I/O Unit Area, and CompoBus/D Area	IR: I/O Area and AR Area
A: Auxiliary Area	AR: AR Area
T: Timer Area	LR: LR Area
C: Counter Area	HR: HR Area
IR: IR Area	TC: Timer/Counter Area
DR: DR Area	DM: DM Area
D: DM Area	EM: EM Area
TK: Task Flat Area	---
H: HR Area	---
W: Work Area	---
E: EM Area	---

Note The above areas are listed in the order of display in the data area workspace located in the I/O memory window. All I/O memory areas displayed vary with the PLC model or CPU model.

12-2-4 Starting and Quitting PLC Memory Window

Starting PLC Memory Window and Displaying PLC Data Table

1,2,3...
1. Right-click the **PLC** Icon and select **Memory** from the pop-up menu or from the **PLC** Menu.

The following initial screen will be displayed.

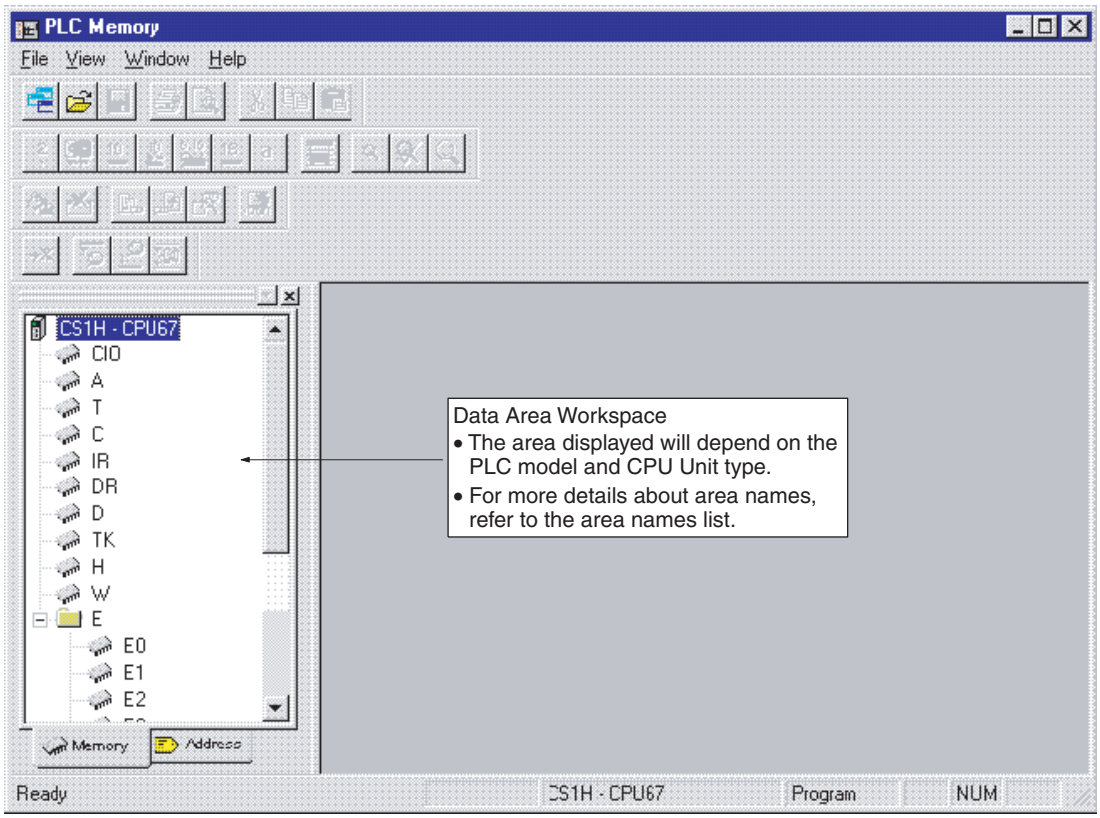

2. Double-click the name of the desired area in the data area workspace.

   The PLC data table will be displayed. The following example is the PLC data table of the CIO area of the CS/CJ Series.

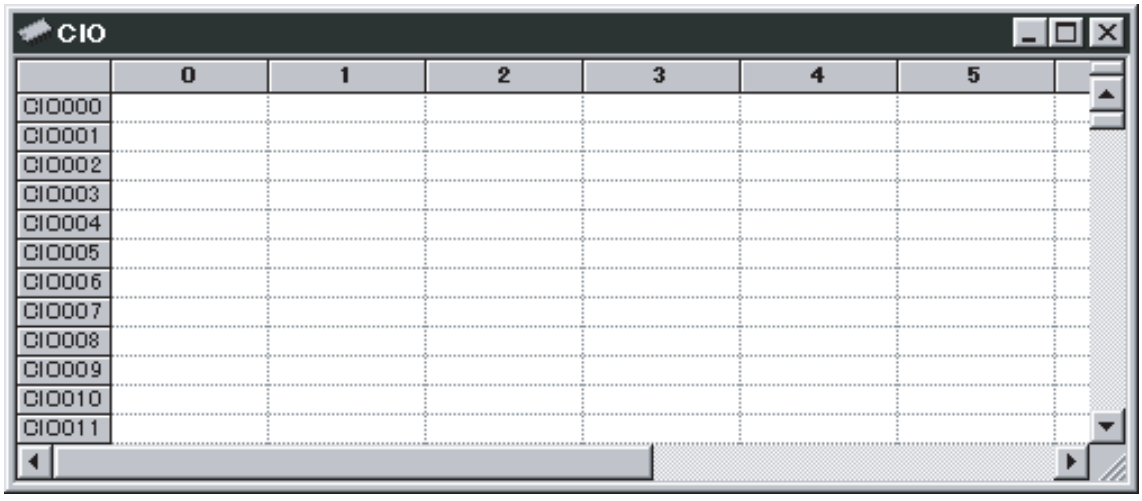

Quitting PLC Memory Window

Select **Exit** from the **File** Menu in the PLC memory window. The PLC memory window will close.

12-2-5 Changing Display and Input Formats

The display and input formats are selectable per I/O memory area in the following methods, provided that the PLC data table is active.

Selecting from Menu

Select **Display** from the **View** Menu.

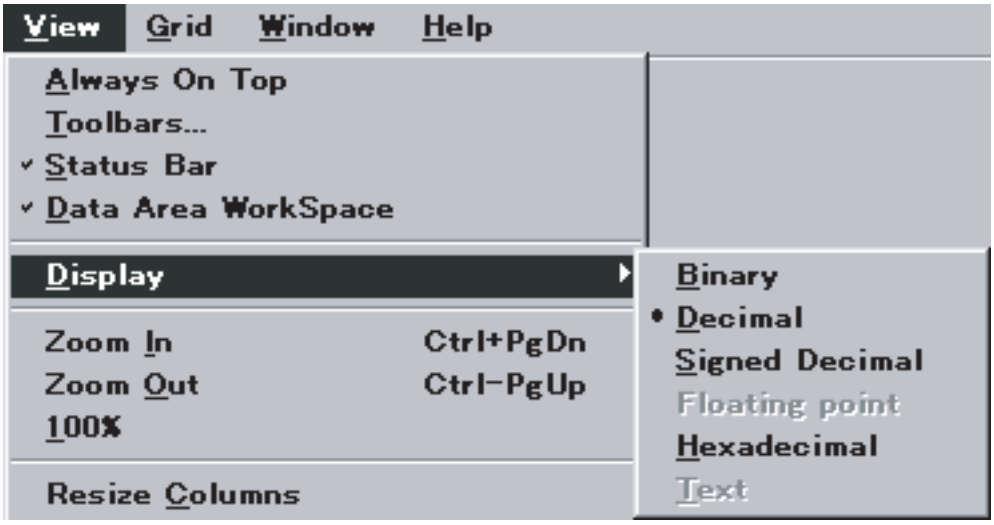

Selecting from Pop-up Menu

Right-click a cell in the PLC data table and select the display format from the pop-up menu.

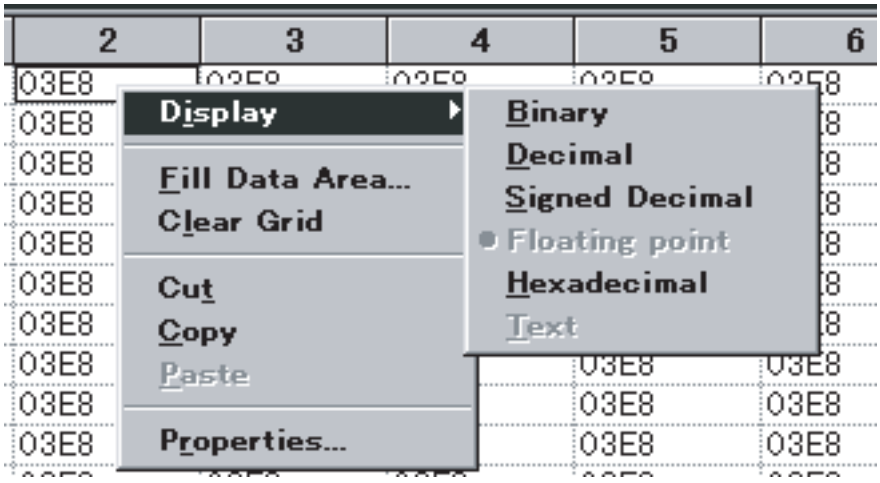

Selecting from Toolbar

Left-click the icon on the toolbar.

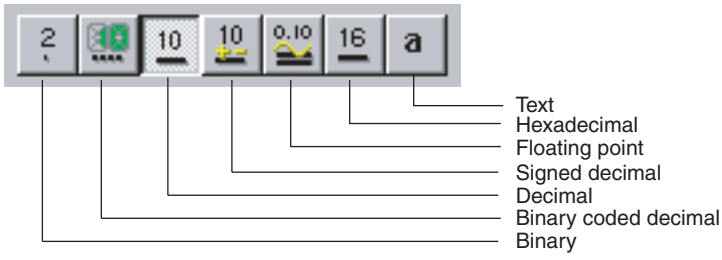

Note The default data display format in the PLC data table can be changed by selecting the new default data display format from the **Display** Tab in **Preferences** in the **Display** Menu.

12-2-6 PLC Memory Window Settings

Properties, such as the default data display format and monitor refresh cycle of the PLC memory window can be changed.

Displaying Properties Dialog Box

1,2,3...

1. Select **Preferences** from the **View** Menu.

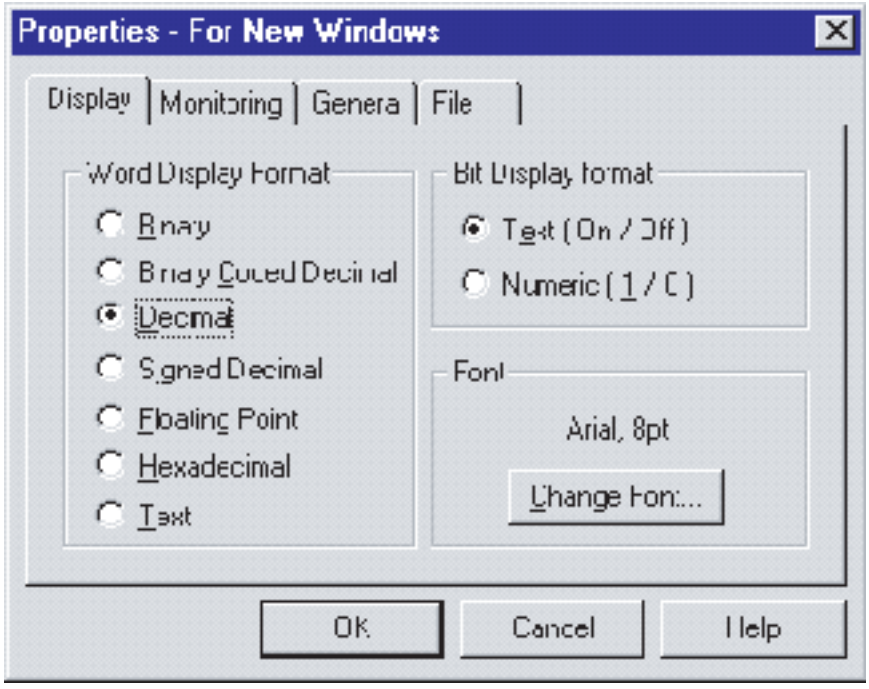

2. Left-click the buttons of the items to be set.
3. Left-click the **OK** Button to enter the settings. The details of tab settings are explained below.

Settings in Display Tab

Use the following procedure to set the default data display format in the PLC data table.

1,2,3...

1. Select the **Display** Tab from the **Properties - For New Windows** Dialog Box. The above window will be displayed.
2. Select the default word and bit display formats. It is also possible to change the font.

Settings in Monitoring Tab

Use the following procedure to set the monitor update interval.

1,2,3...

1. Select the **Monitoring** Tab from the **Properties - For New Windows** Dialog Box.

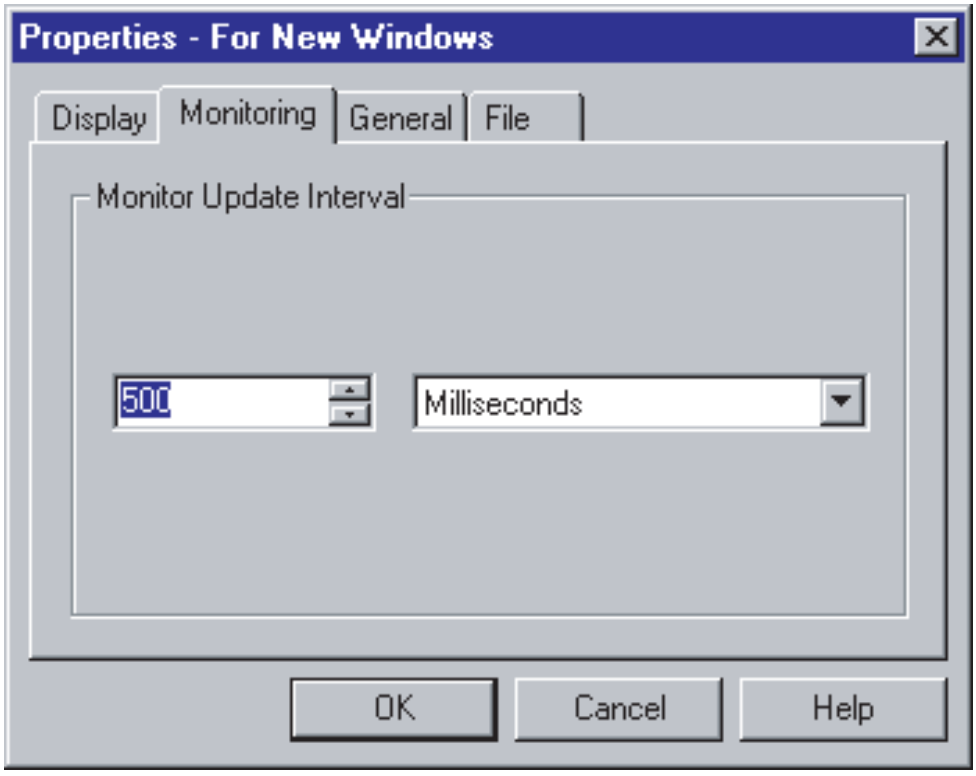

2. Set the refresh period and unit and left-click the **OK** Button.

Settings in General Tab

1,2,3...

1. Select the **General** Tab from the **Properties - For New Windows** Dialog Box.

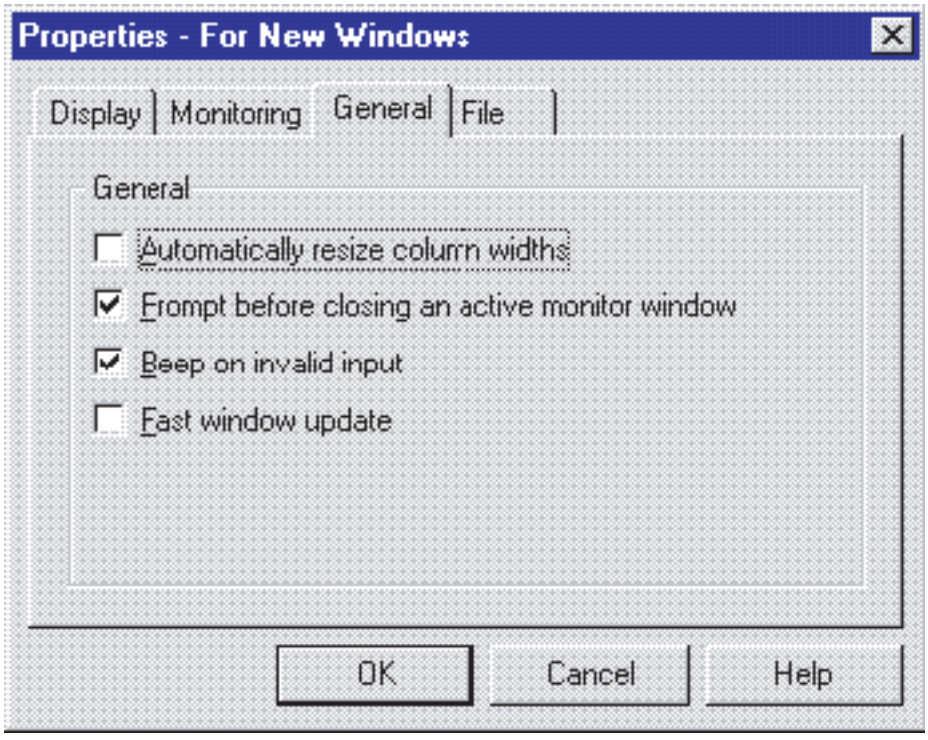

Automatically resize column widths: The column widths will be automatically adjusted according to the window size of the PLC data table.

Prompt before closing an active monitor window: A prompt message will be displayed when closing the window being monitored.

Beep on invalid input: An alarm is sounded when an inappropriate input is made.

Fast window update: Makes the renewal speed for display data faster.

Note If the **Fast window update** setting is enabled, the speed at which data is renewed will increase but the display may flicker.

2. Select the function and left-click the **OK** Button.

Settings in File Tab

Use the following procedure to edit the comment. The file name and comment will be displayed when I/O memory data is saved in the file by selecting **Save to File** from the **File** Menu.

1,2,3... 1. Select the **File** Tab from the **Property - For New Windows** Dialog Box.

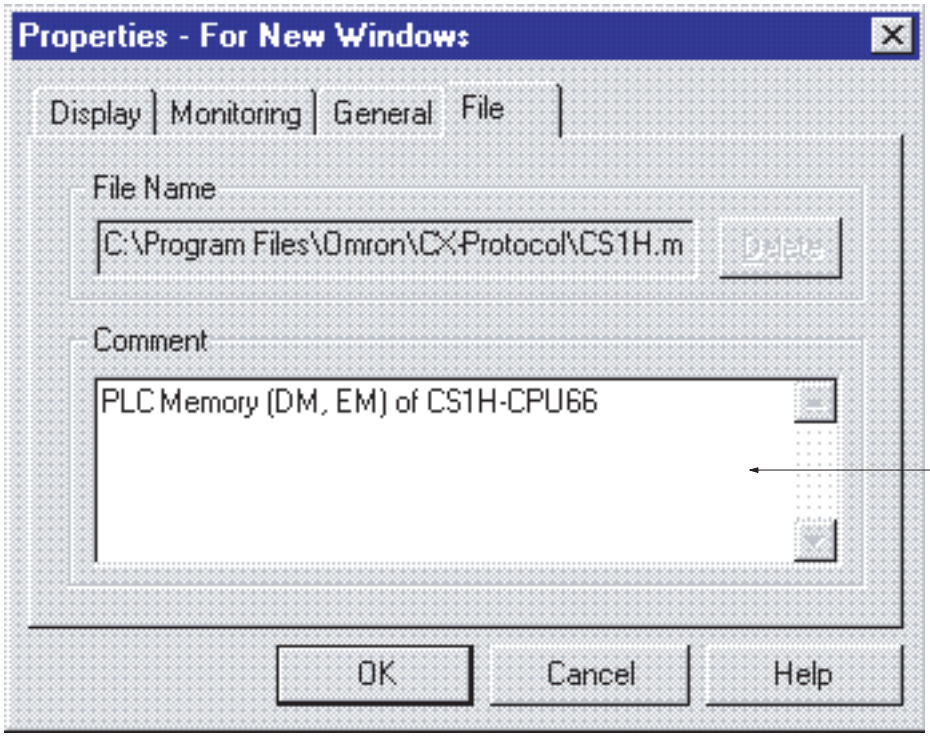

The comment input when saving the data will be displayed. This comment can be edited from this screen.

2. Enter comments in the **Comment** Field.
3. Click the **OK** Button.

Note With the CX-Protocol, the **Delete** Button is not available in the **File** property.

12-3 I/O Memory Display and Editing

12-3-1 Displaying I/O Memory

1,2,3... 1. Double-click the name of the area to be displayed in the data area workspace. The data table will be displayed.

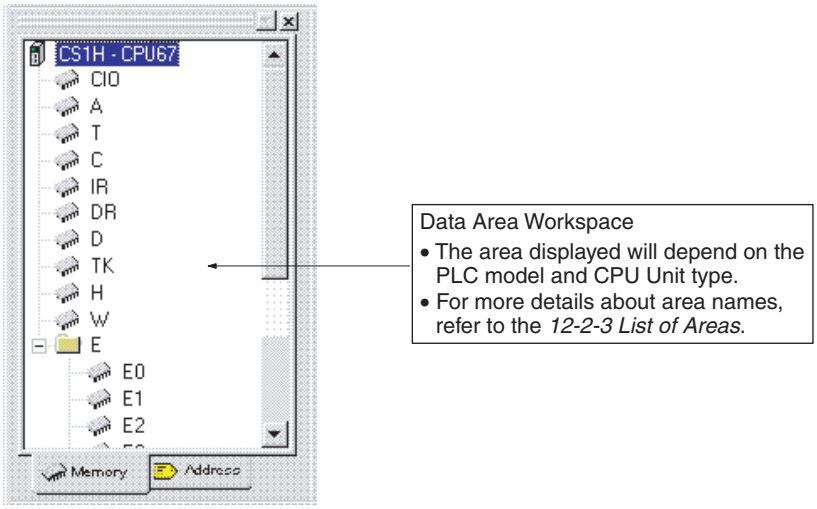

The following example is the data memory area of the CS/CJ Series.

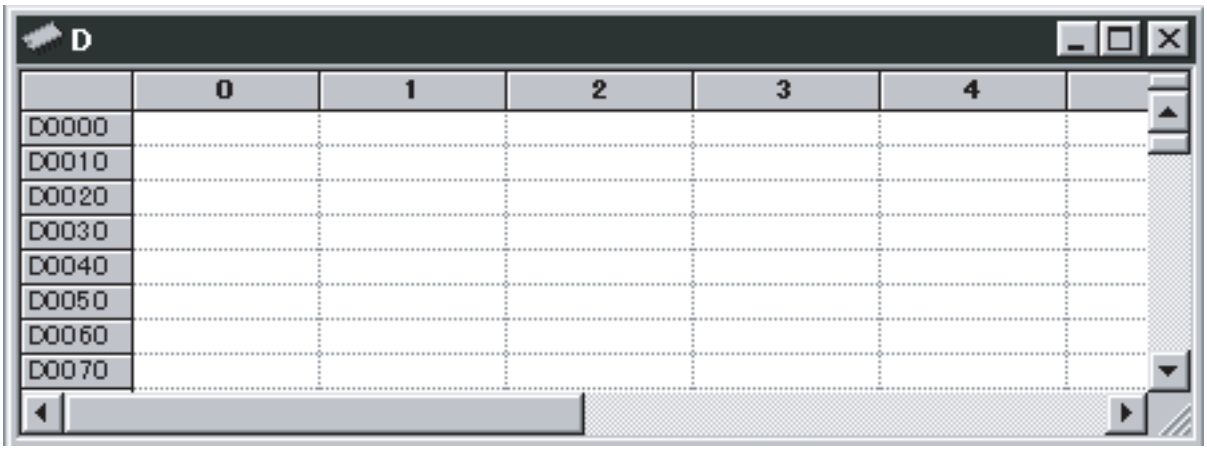

Note These operations are not supported for an NJ-series CPU Unit.

12-3-2 Editing I/O Memory Data

Editing Data

1,2,3... 1. Left-click the cell of the address to be edited in the PLC data window. Multiple cells, lines, or rows can be selected.

2. Input or edit the data according to the display format.

The PLC data table can be displayed and edited offline or online. The edited data can be transferred to a PLC that is connected online so that the data in the PLC will be changed. Refer to *12-5 I/O Memory Transfer and Comparison* if the edited data needs to be transferred to the PLC.

Note The cells corresponding to read-only areas (e.g. parts of SR area), are displayed in gray. Editing cannot be performed in gray cells.

Data Storage

I/O memory data can be stored using either of the following methods.

- Saving in project: Select **Save in Project** from **File** Menu.

- Saving as a different file (.MEM file): Select **Save to File** from **File** Menu.

Saving in Project

1,2,3... 1. Select **Save in project** from the **File** Menu in I/O memory window. The **Save** Dialog Box will be displayed.

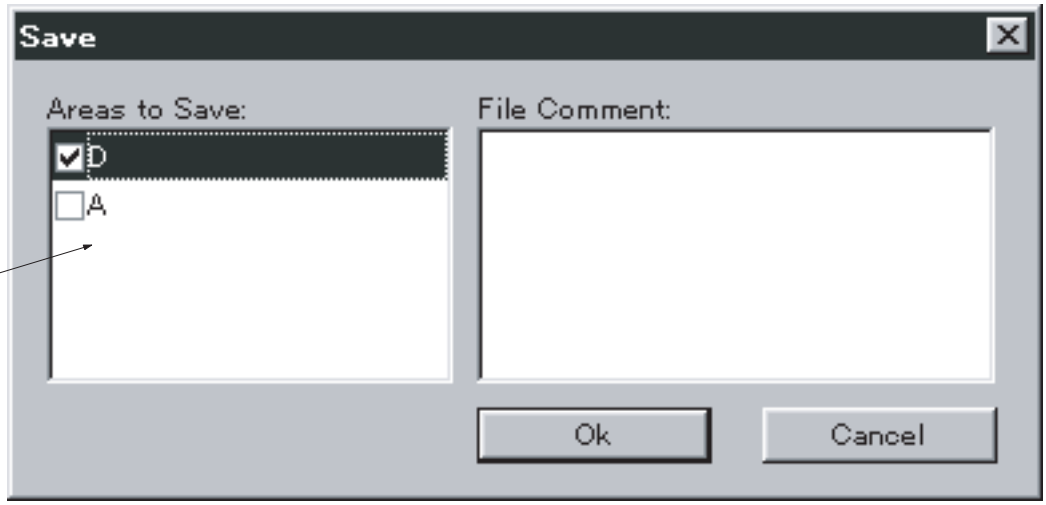

A comment can be entered in **File Comment**, if required.

2. Select the area to be saved. Left-click the **OK** Button to start saving the area.

Note When deleting PLC data in project, select **Properties** from the **Display** Menu and perform the deletion from the **File** Tab.

Saving as Different File (.MEM File)

1,2,3... 1. Select **Save to File** from the **File** Menu in the PLC memory window. The **Save** Dialog Box will be displayed.

2. Select the area to be saved and left-click the **OK** Button. The **Save** Dialog Box will be displayed.

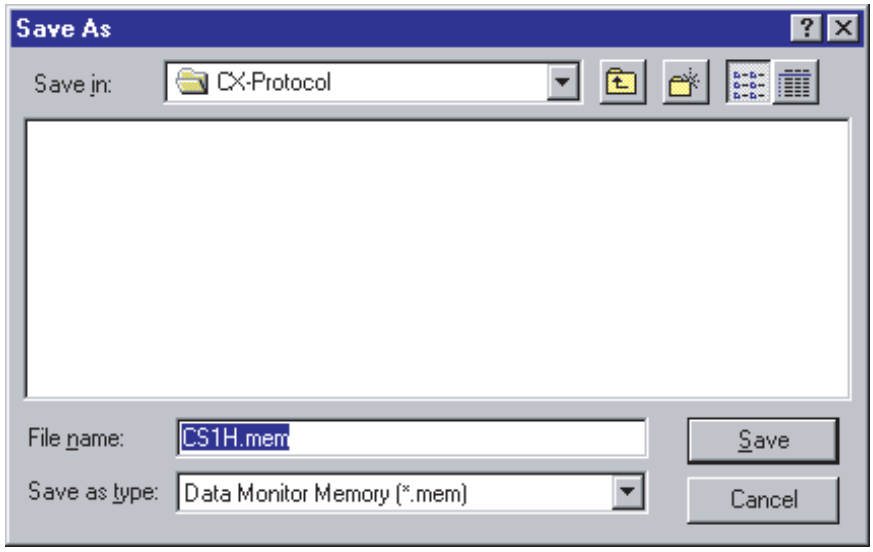

3. Set the file name and location where the file is to be saved. Left-click the **Save** Button to start saving the data.

12-3-3 Writing Same Data to Successive Addresses

Use the following procedure to write the same data to the designated cell, line, or row.

Writing Same Data to Designated Line

As an example, the procedure for writing **FFFF** (hexadecimal) into D0030 is given.

1,2,3...

1. Select and highlight the cell. In the following example, row D0030 is selected and highlighted. Drag the cursor to the left to select the entire line.

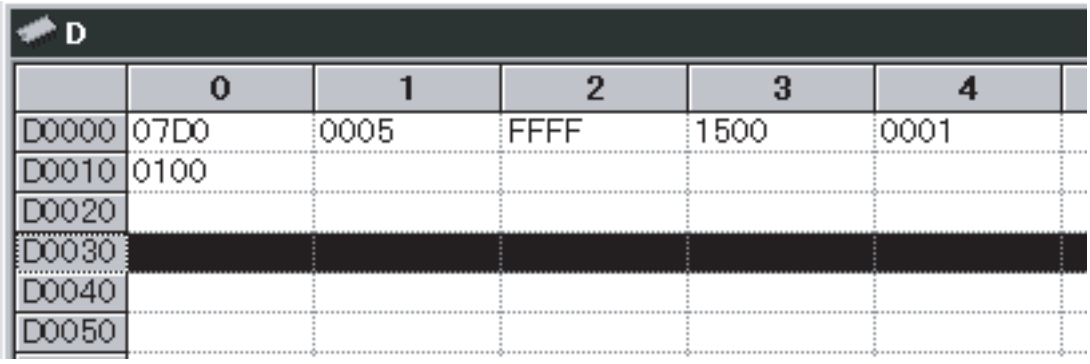

2. Select **Fill Data Area** from the **Grid** Menu.
   The **Fill Memory Area** Dialog Box will be displayed.

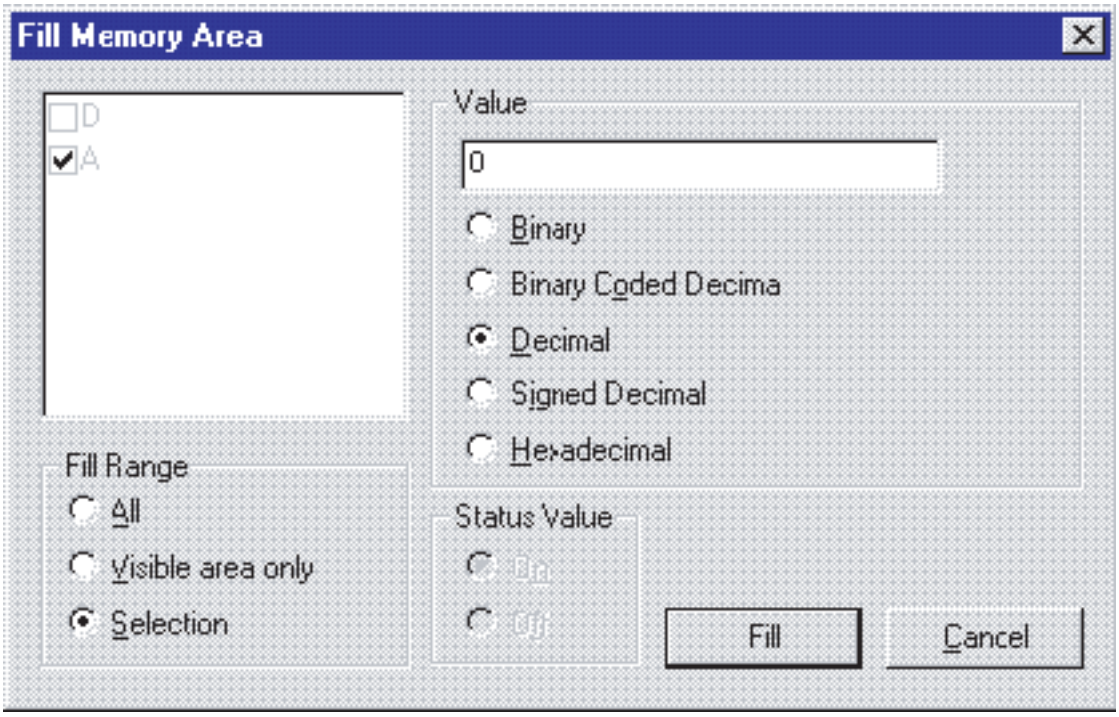

Note In this example, the **Fill Range** settings should not be changed.

3. Select the input format and enter the **Value** Field. In this example, **Hexadecimal** is selected and **FFFF** is entered.
4. Left-click the **Fill** Button.
   The data set in step 3 will be written to the cell designated in step 1.

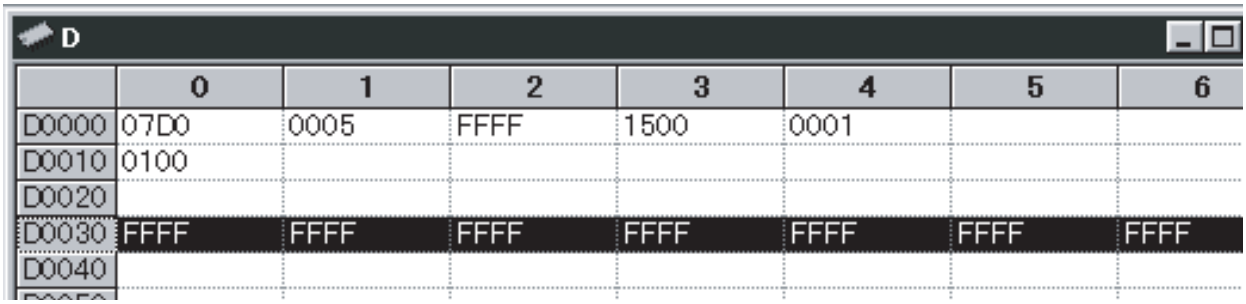

Writing Same Data to Whole Bit Areas or Display Areas

Use the following procedure to write the same data to the whole data table currently opened or the displayed range of the data table (i.e., the range displayed in the window).

1,2,3...

1. Select **Fill Data Area** from the **Grid** Menu.
   The **Fill Memory Area** Dialog Box will be displayed.
2. Make the area, **Fill Range**, **Value**, and **Status Value** settings.

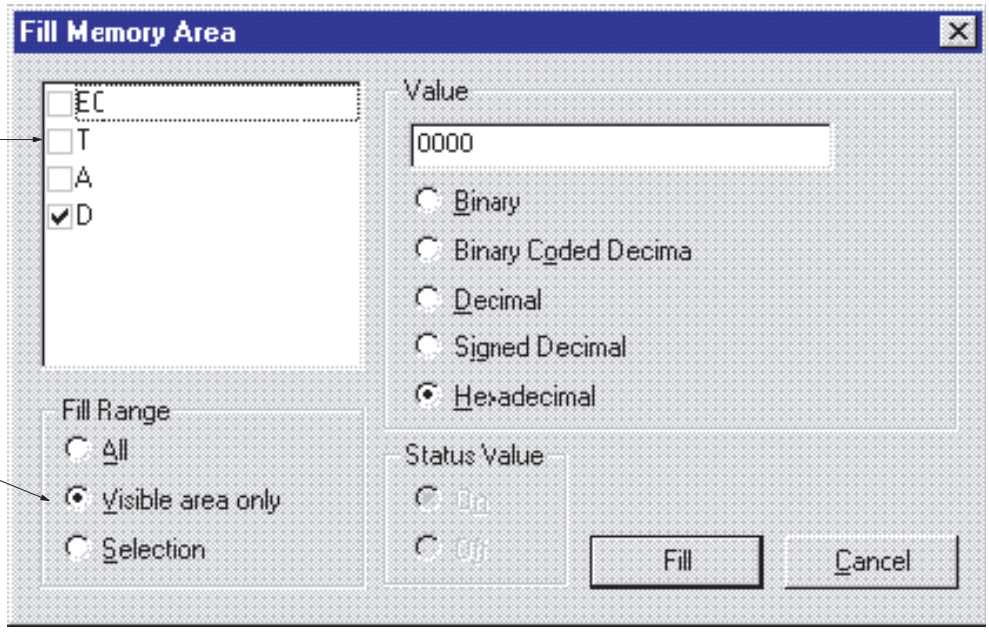

Select the areas where the same data is written.

By selecting **All**, the same data will be written to all the selected areas.

By selecting **Visible area only,** the same data will be written to the range of the above areas displayed in the PLC data table.

3. Left-click the **Fill** Button.

12-4 I/O Memory Monitor

While the PLC is connected online, the I/O memory status per area of the PLC can be monitored. The value displayed on screen varies with the I/O memory status of the PLC.

Note This operation is not supported for an NJ-series CPU Unit.

Note

1. Do not monitor EM area used for file memory. If monitoring is performed for this area, it will become impossible to display any present values.
2. When in MONITOR or RUN mode, only data in the data in the data memory area (D) and extended data memory area (E) can be transferred to the PLC.

12-4-1 Monitoring Whole I/O Memory

1,2,3...

1. Connect the PLC online. This step can be taken after step 2 if desired.
2. Double-click the name of the area to be displayed in the data area workspace and display the PLC data table. Multiple areas can be monitored simultaneously.
3. Right-click a cell in the PLC data table and select **Monitor** from the **Online** Menu.

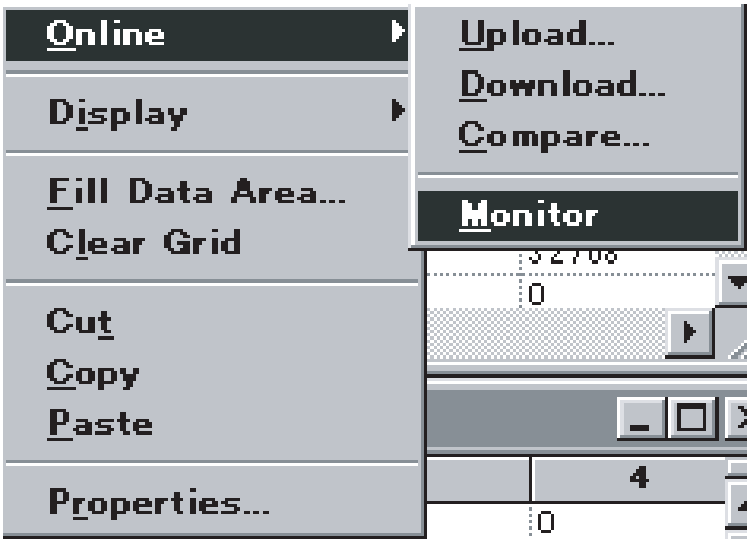

The following dialog box will be displayed.

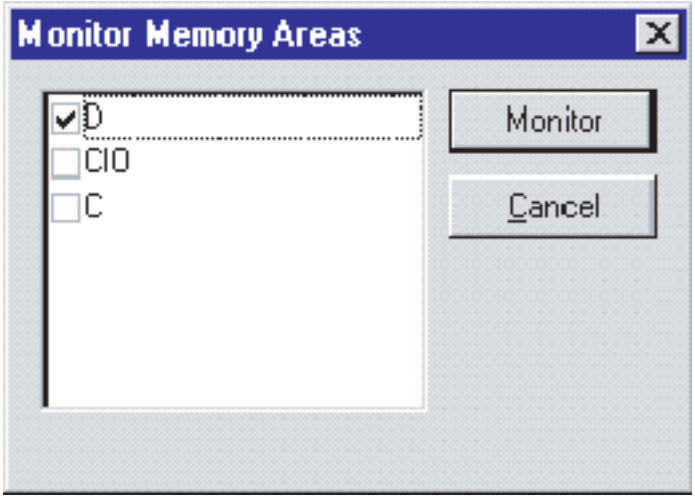

4. Select the area to be monitored and left-click the **Monitor** Button.
   The displayed range of the selected area in the PLC data window will be monitored.

Example: Data Memory Monitor Screen

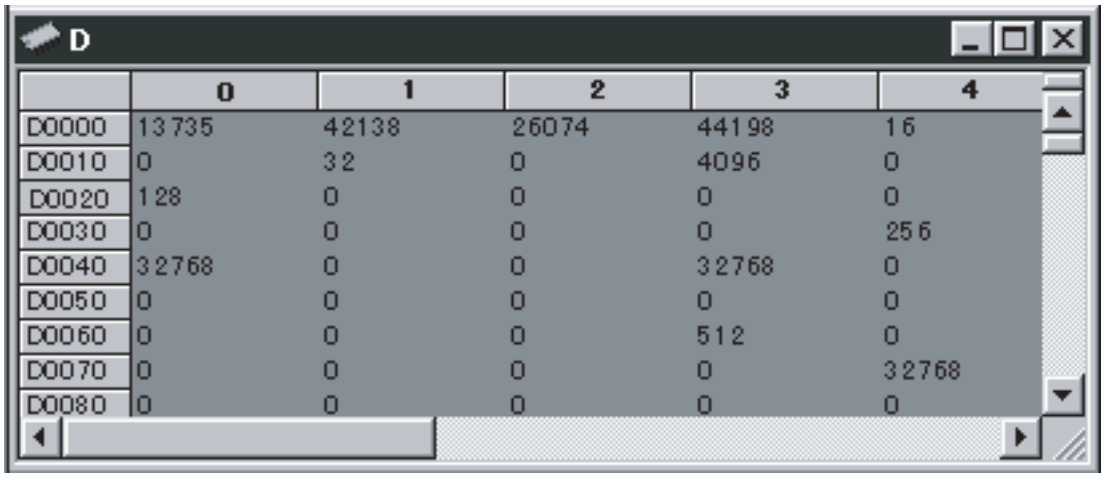

	0	1	2	3	4
D0000	13735	42138	26074	44198	16
D0010	0	32	0	4096	0
D0020	128	0	0	0	0
D0030	0	0	0	0	256
D0040	32768	0	0	32768	0
D0050	0	0	0	0	0
D0060	0	0	0	512	0
D0070	0	0	0	0	32768
D0080	0	0	0	0	0

Note If monitoring is performed, the data read from the PLC will be overwritten with the edited data displayed on the screen. For this reason, if there is edited data in the PLC data table, a save confirmation message will be displayed when monitoring is executed.

12-4-2 Address Monitor

The address or I/O name can be designated in the address monitor table to monitor the data. This function is convenient in the following cases.

- Monitoring the data in bits or words of multiple areas in a single table for the purpose of debugging.
- Monitoring the data in bits or words that are not adjacent in the same area (e.g., the data in D00001 and D1000).

1,2,3... 1. Left-click the **Address** Tab in the data area workspace.

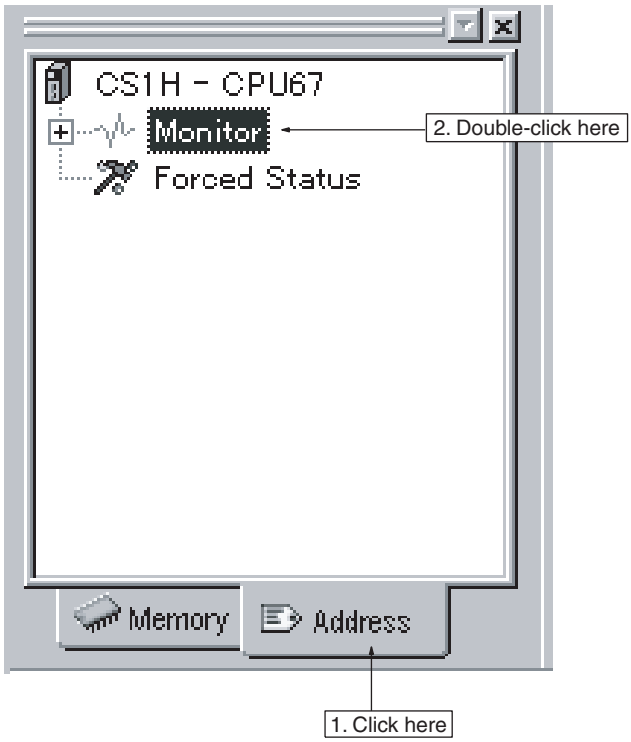

2. Double-click **Monitor**.
   The following **Address Monitor** table will be displayed.

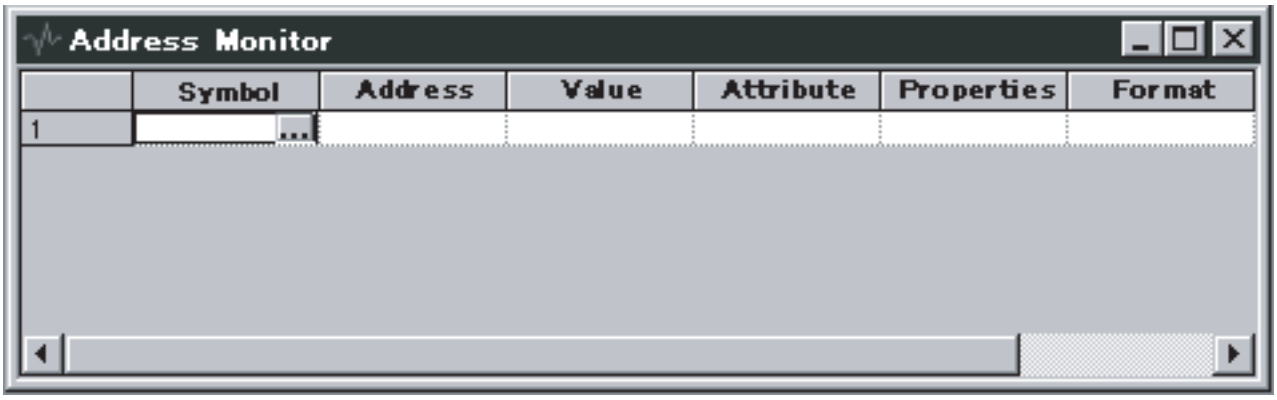

3. Input the address or variable and press the **Enter** Key.
   The data in the designated bits or words will be displayed.

Example:

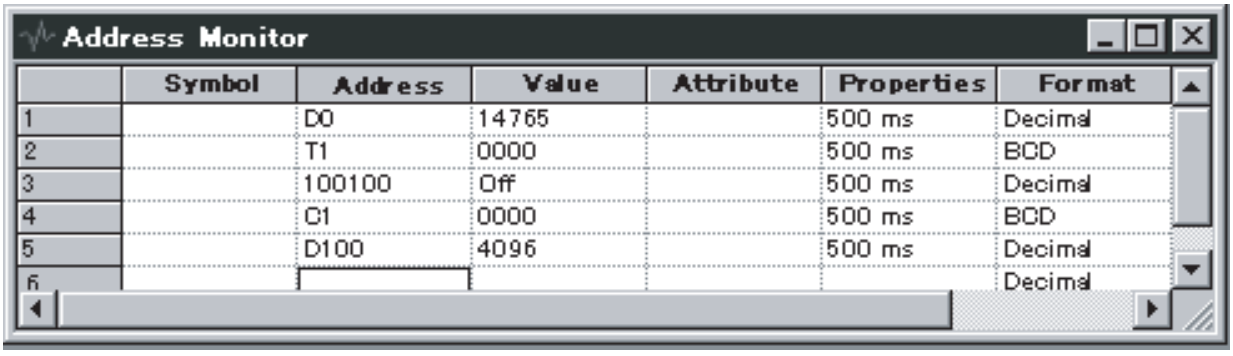

Note Set the monitor refreshing cycle in the **Monitor** Tab by selecting **Preferences** in the **View** Menu.

Force-set/reset in Address Monitor

Select the address to be force-set/reset, and from the **Address** Menu, select **Set** or **Reset** as required from the **Force Status** Menu. Alternatively, the **Force Status** Menu can be selected from the pop-up menu displayed by right-clicking. Similarly, when clearing, select **Clear**.

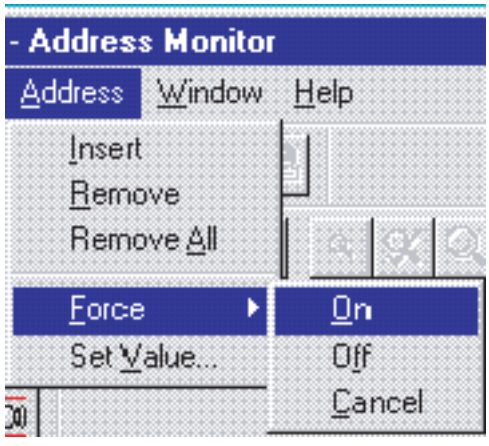

Changing Present Values in Address Monitor

Select the address for which the present value is to be changed and from the **Address** Menu select **Set Value**. Alternatively, **Set Value** can be selected from the pop-up menu displayed by right-clicking.

- For word addresses, after specifying the data format (binary, BCD, decimal, signed decimal, hexadecimal), enter the new value in the **Word Value** Field.
- For contact addresses, specify “ON” or “OFF” in the **Bit Value** Field.

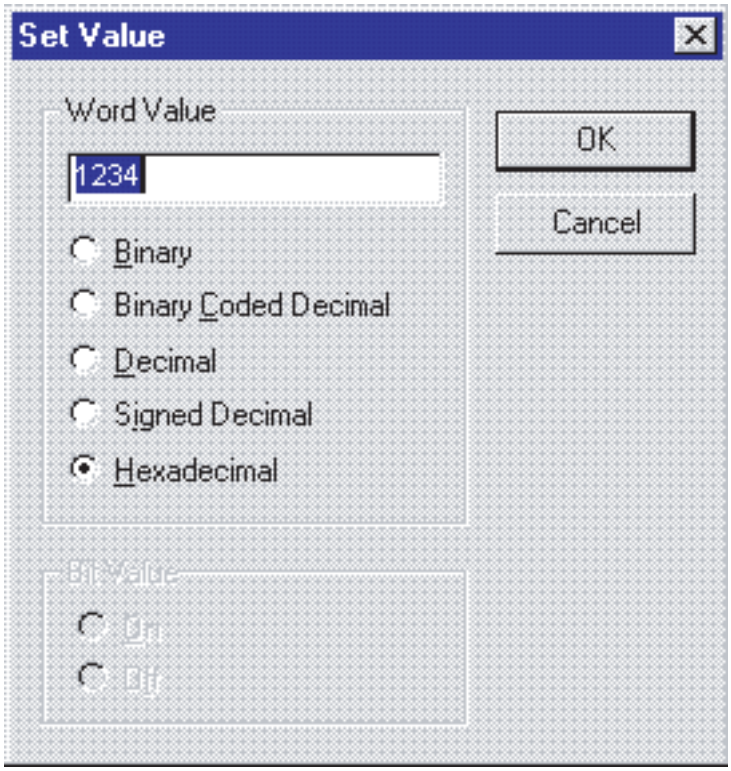

12-4-3 Finding Force-set or Force-reset Bits

Use the following procedure to find and display the force-set or force-reset bits.

1,2,3... 1. Click the **Address** Tab in the data area workspace.

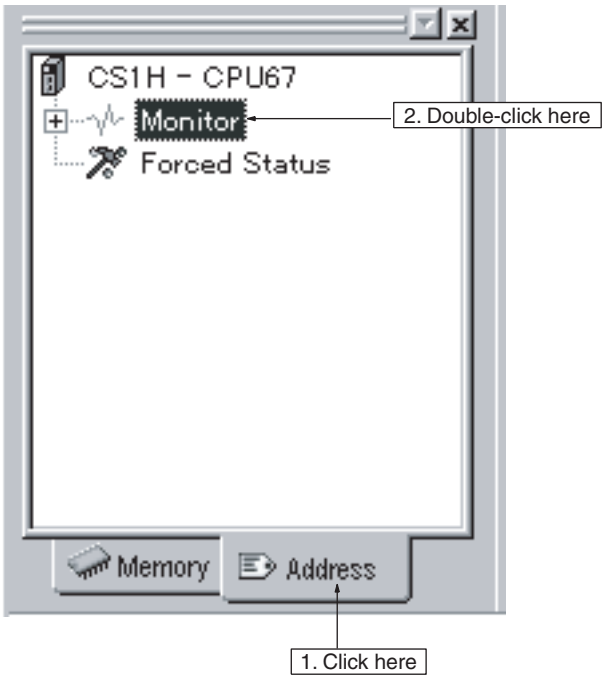

2. Double-click **Forced Status**.
   - The search operation will start.
   - The following window will be displayed on completion of the search operation.

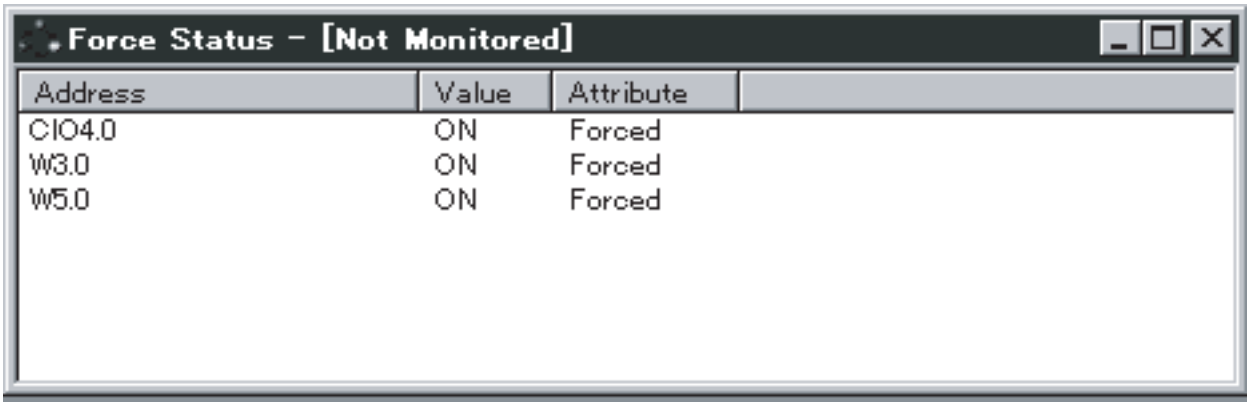

   - If **Refresh** is selected from the **Force Status** Menu, the search operation will be performed again, and the bits that have been force-set/reset will be displayed.

12-5 I/O Memory Transfer and Comparison

The following description provides information on how to transfer edited data from the PLC data table to the PLC, transfer data from the PLC to the PLC data table, and compare data in the PLC with data edited in the PLC data table.

Note This operation is not supported for an NJ-series CPU Unit.

⚠ **WARNING** Confirm safety before transferring the I/O memory area state to the CIO area of the PLC using the PLC memory window function of the CX-Protocol. Not doing so may cause malfunction in devices connected to the I/O Units regardless of the operating mode of the CPU Unit.

⚠ **Caution** Confirm that no adverse effect will occur in the system before transferring data to the PLC. Not doing so may result in an unexpected operation.

⚠ **Caution** Confirm that the PLC is connected online before transferring or comparing the data. Not doing so may result in an unexpected operation.

⚠ **Caution** Confirm that no adverse effect will occur in the system before changing the present value of any word in memory. Not doing so may result in an unexpected operation.

⚠ **Caution** Confirm that no adverse effect will occur in the system before force-setting/force-resetting any bit in memory. Not doing so may result in an unexpected operation.

12-5-1 Precautions for Transfer of Data to PLC

The following tables list the available PLC modes and I/O memory areas for data transfer to the PLC.

Note Before changing the operating mode, make sure that the change will not affect the installation.

I/O memory	Operating mode		
	PROGRAM	MONITOR	RUN
Data memory (D), extended data memory (E)	Transfer supported	Transfer supported	Transfer not supported
All other memory areas	Transfer supported	Transfer not supported	Transfer not supported

12-5-2 Data Transfer

Connect the PLC online before transferring I/O memory data.

Downloading (Personal Computer to PLC)

Use the following procedure to transfer the data of the PLC data table from the personal computer to the PLC.

1,2,3...

1. In the data area workspace, display the PLC data table by double-clicking the name of the area to be downloaded. When downloading part of the PLC data table, specify the range of the area to be downloaded.
   The range can also be specified in step 2.

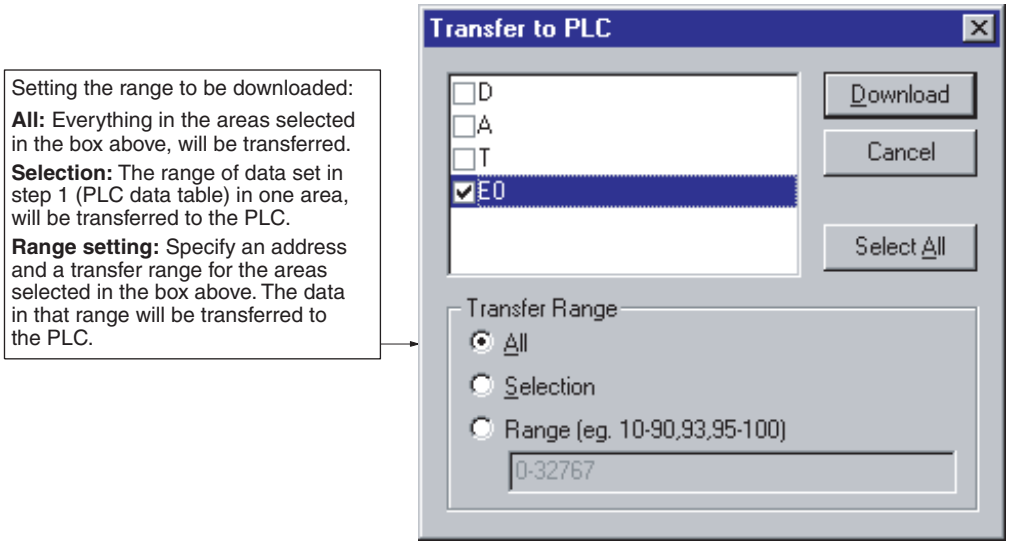

2. Right-click a cell in the PLC data table and select **Transfer To PLC** via **On-line** from the pop-up menu or from the **Online** Menu in the PLC memory window.
3. Set the area and the range of the area to be transferred.
4. Click the **Download** Button.
   Transfer of the data will start.

Uploading (Personal Computer from PLC)

Use the following procedure to transfer the data of the PLC data table from the PLC to the personal computer.

1,2,3...

1. Open the PLC data table of the area to be uploaded. In order to designate the range to be uploaded, highlight the range.

2. Right-click a cell in the PLC data table and select **Transfer From PLC** via **Online** from the pop-up menu or from the **Online** Menu in the PLC memory window.

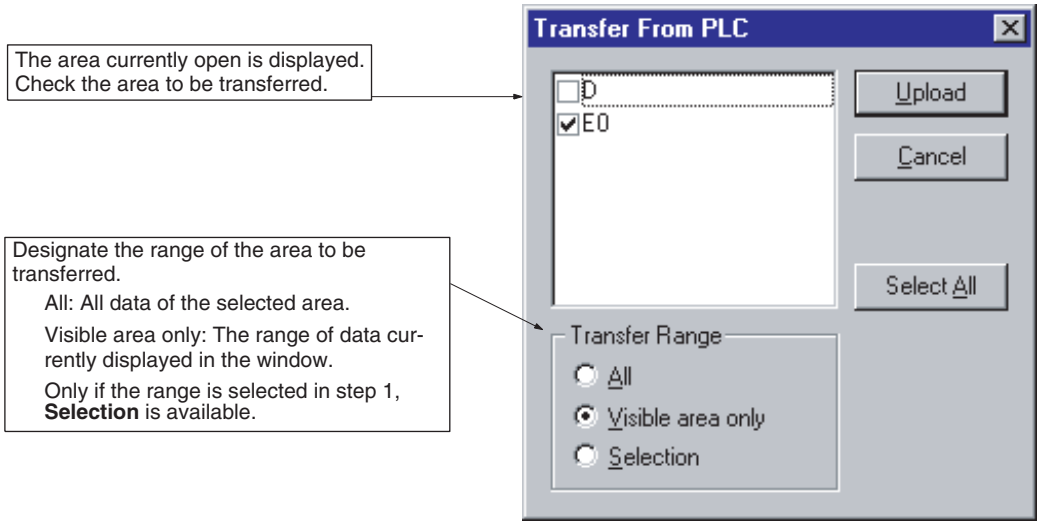

3. Set the area and the range of the area to be transferred.
4. Left-click the **Upload** Button.
   Transfer of the data will start.

12-5-3 Comparison with Data in PLC

Use the following procedure to compare the data of the PLC data table with the data in the PLC after connecting the PLC online.

1,2,3...

1. Open the PLC data table in the area to be compared. To designate the range to be compared, highlight the range.
2. Right-click a cell in the PLC data table and select **Compare with PLC** via **Online** from the pop-up menu or from the **Online** Menu in the PLC memory window.

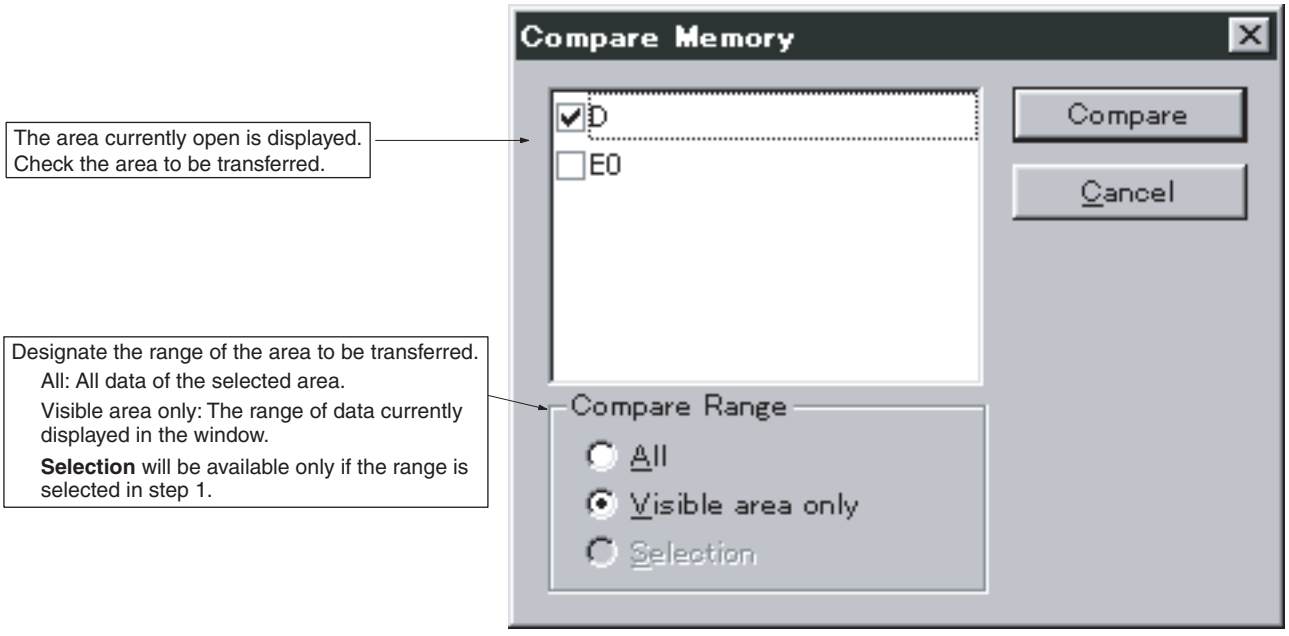

3. Set the area and the range of the area to be transferred.

4. Left-click the **Compare** Button.
   The comparison of the data will start. One of the following messages will be displayed according to the comparison result.

Data Coincident

Data Not Coincident

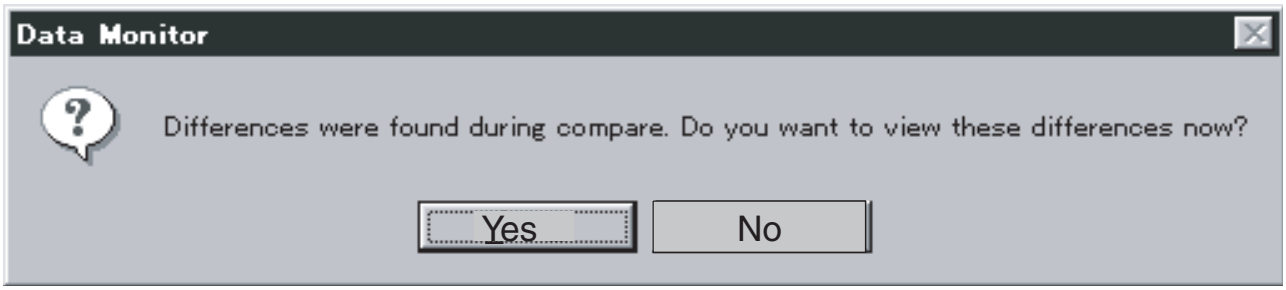

By left-clicking the **Yes** Button, the address of the data in the PLC will be displayed in parentheses.

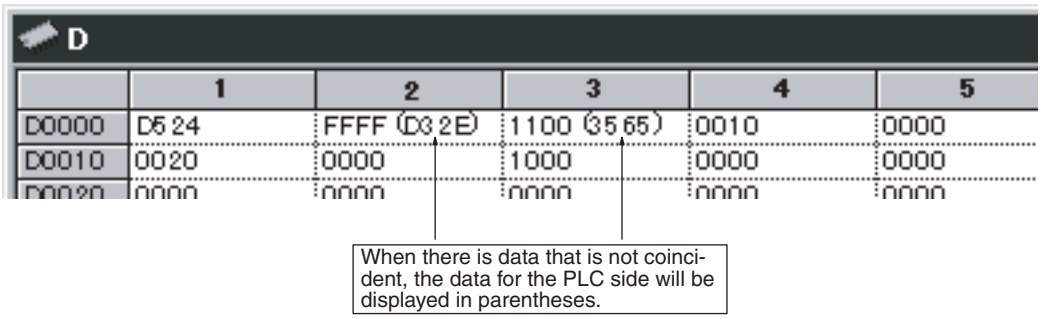

SECTION 13
Error and Error Log Display

This section describes details of the displaying of errors and the error log.

Current Error and Error Log Display

This section provides information on functions that display or clear the current errors and error log. These functions are available only when the PLC is connected online.

The errors and error log are displayed in the error log window. A message can be displayed in the **PLC Errors** Window by executing the MSG instruction.

Note These operations are not supported for an NJ-series CPU Unit.

Displaying Errors

1,2,3...

1. Connect the PLC online.
2. Right-click the **PLC** Icon and select **Error Log** from the pop-up menu or from the **PLC** Menu.
   - The following **Errors** Tab will be displayed in the **PLC Errors** Window.

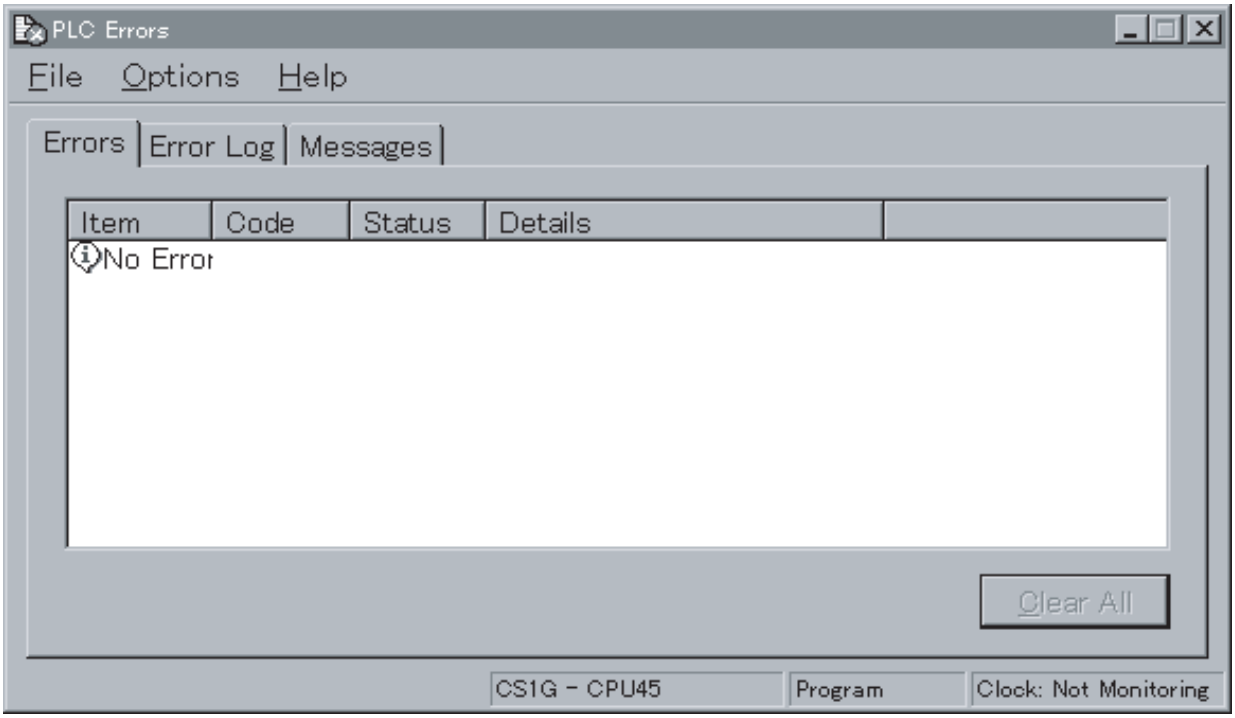

- All the errors currently resulting are displayed in the **Errors** Tab in the **PLC Errors** Window.
- The display of errors will be automatically refreshed whenever a new error occurs.
- Each error is displayed with its error type (i.e., fatal error or non-fatal error).
- The following errors will be displayed if they result.

Fatal Errors (in Order of Priority)

Memory Error
I/O Bus Error
Unit/Rack Number Duplication Error
Inner Board Fatal Error
I/O Points Over
I/O Setting Error
Program Error
Cycle Time Over
FALS Error

Non-fatal Errors (in Order of Priority)

FAL Error
Interrupt Input Unit Error
Basic I/O Error
PLC Setup Error
I/O Table Verification Error
Inner Board Nonfatal Error
CPU Bus Unit Error
Special I/O Unit Error
SYSMAC BUS Error
Battery Error
CPU Bus Unit Setup Error
Special I/O Unit Setup Error

Note It is possible to display the **PLC Errors** Window whenever an error occurs. Furthermore, it is possible keep displaying the **PLC Errors** Window on top or keep displaying the clock of the PLC on the status bar of the error log window. For details, refer to page 326, *Setting PLC Errors Window Conditions*.

3. Whenever an error is displayed, remedy the error.
4. Left-click the **Clear All** Button and delete the error display.

Note If a memory error has resulted, the error display will not disappear when the **Clear All** Button is left-clicked in step 3. Instead, the following dialog box will be displayed.

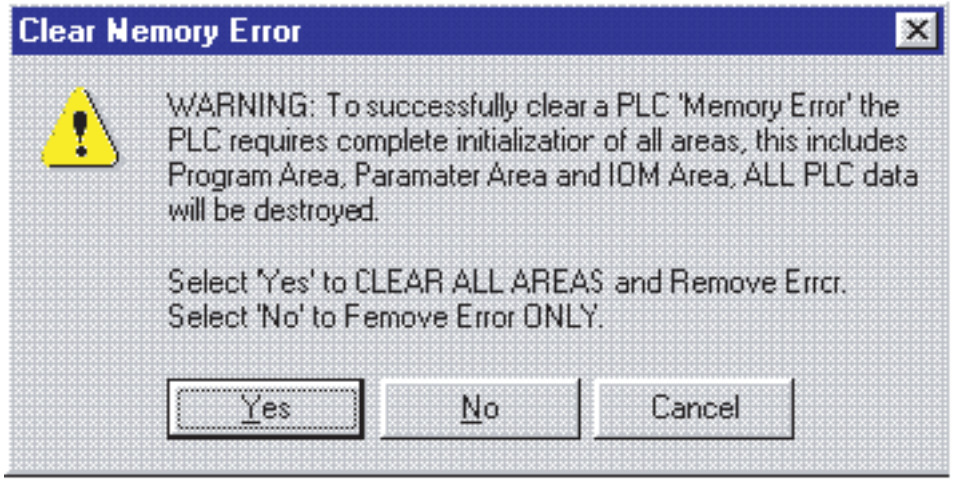

- Left-click **Yes** to clear all memory areas of the CPU Unit. The memory areas will be initialized.
- Left-click **No** to clear the error display only. The memory areas will not be initialized.

Displaying the Error Log

Use the following procedure to display the log of errors that have resulted.

Left-click the **Error Log** Tab in the error log window.
The following error log will be displayed.

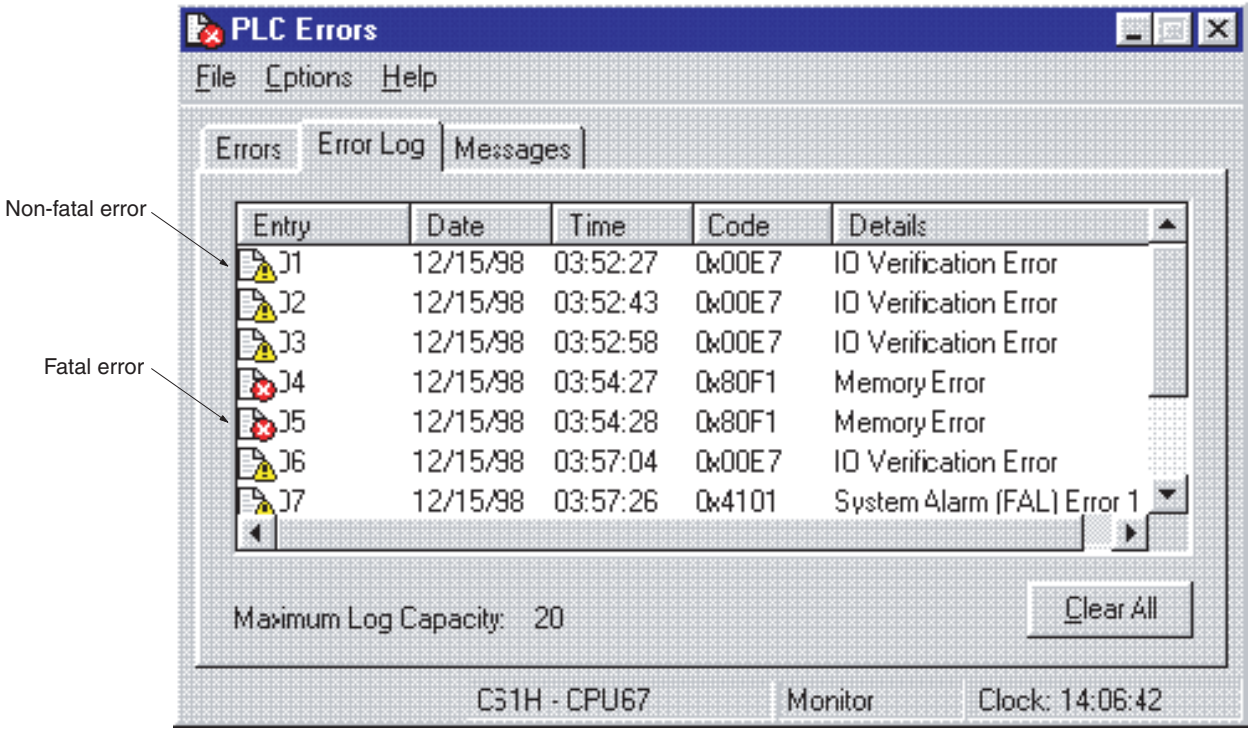

- The items of errors displayed in the **Error Log** Tab are the same as those in the **Errors** Tab. Refer to the previous subsection for details.
- Left-click the **Clear All** Button. The error log will be cleared.
- A maximum of 20 errors can be recorded in the error log. If the 21st error results, the oldest recorded error will be deleted.

Note When in CPU Standby (fatal error), errors will not be displayed in the errors in progress or error log. Errors can be determined if the POWER indicator on the Power Supply Unit is lit and the RUN and ERR/ALM indicators on the CS/CJ/CP-series CPU Unit are not lit.

Displaying Messages

Use the following procedure to display messages by executing the MSG instruction.

Double-click the **Messages** Tab in the **PLC Errors** Window.
The following **Messages** Tab will be displayed.

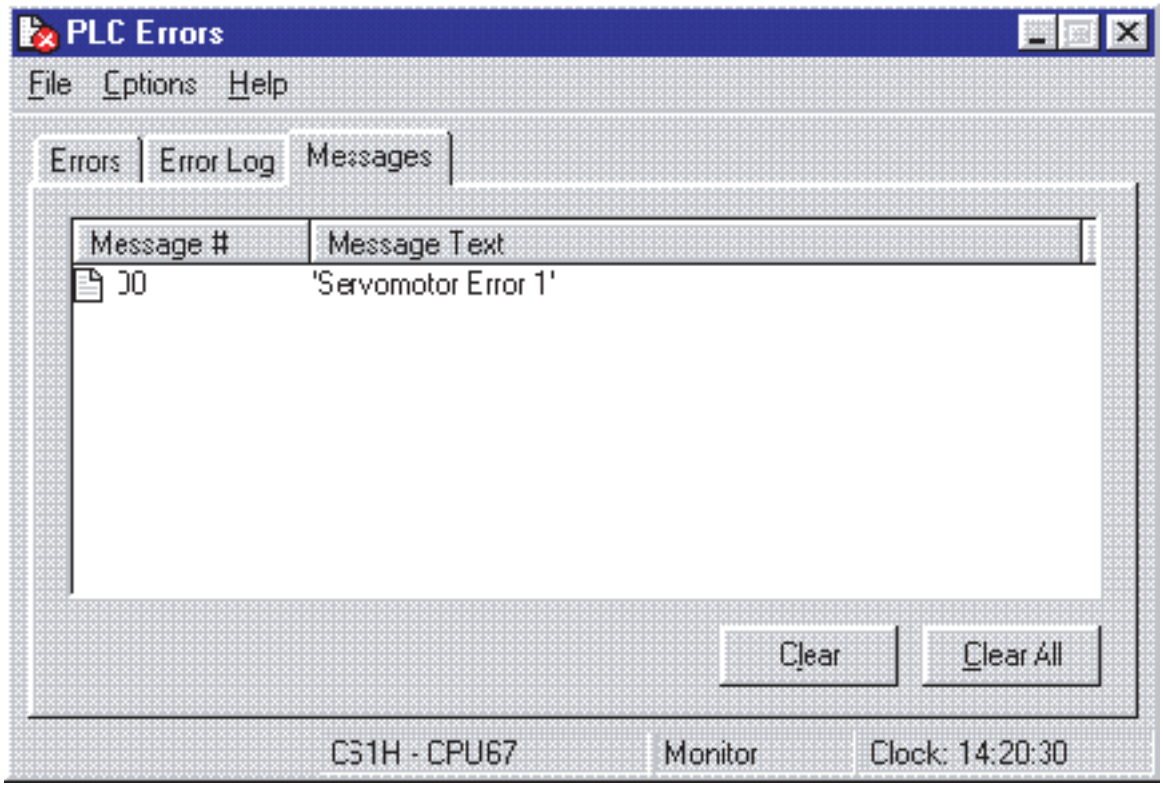

- Message numbers and message texts are displayed.
- Up to eight messages are displayed.
- Messages selected are cleared by left-clicking the **Clear** Button.
- All the messages displayed are cleared by left-clicking the **Clear All** Button.

Note

1. Control codes other than ASCII will be displayed with a space.
2. Two-byte code can be displayed.
3. Messages designated by FAL or FALS instructions cannot be displayed.

Setting PLC Errors Window Conditions

Use the following procedure to set **PLC Errors** Window conditions.

Opening the Option Dialog Box

Select **Settings** via **Option** Menu from the **PLC Errors** Window.

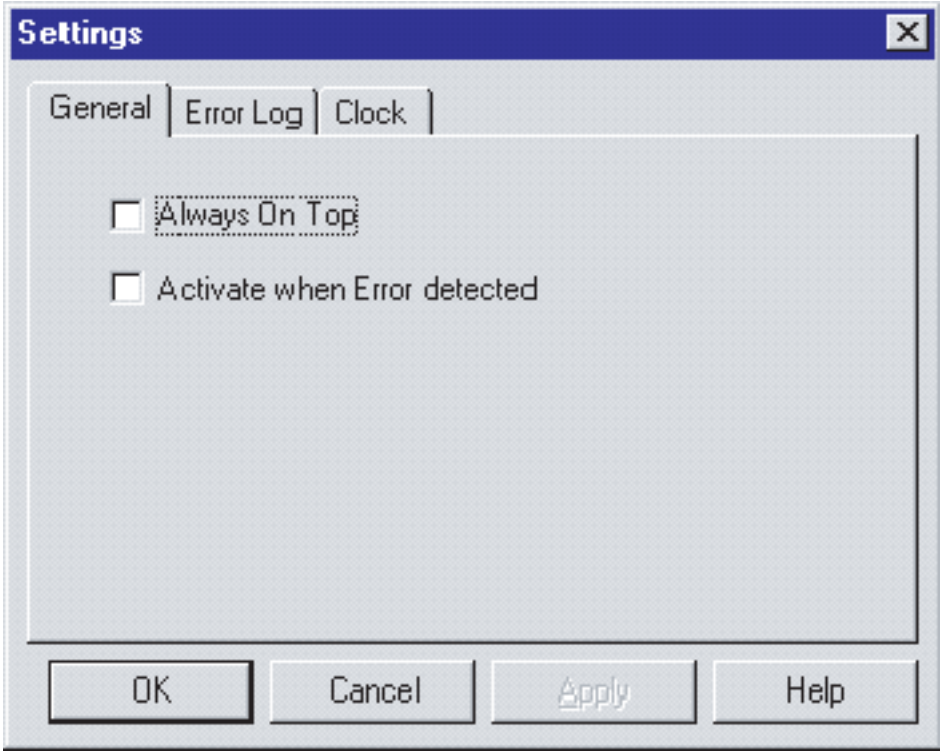

General Tab Settings

1,2,3...

1. Select **General** Tab from the **Settings** Dialog Box.
   The above screen will be displayed.
   - **Always On Top** will always display the error log window on top.
   - **Activate when Error detected** will automatically display the **PLC Errors** Window that is open with the PLC connected online but located behind other windows or minimized on top when an error is detected.

Error Log Tab Settings

Select the **Error Log** Tab from the **Setting** Dialog Box.

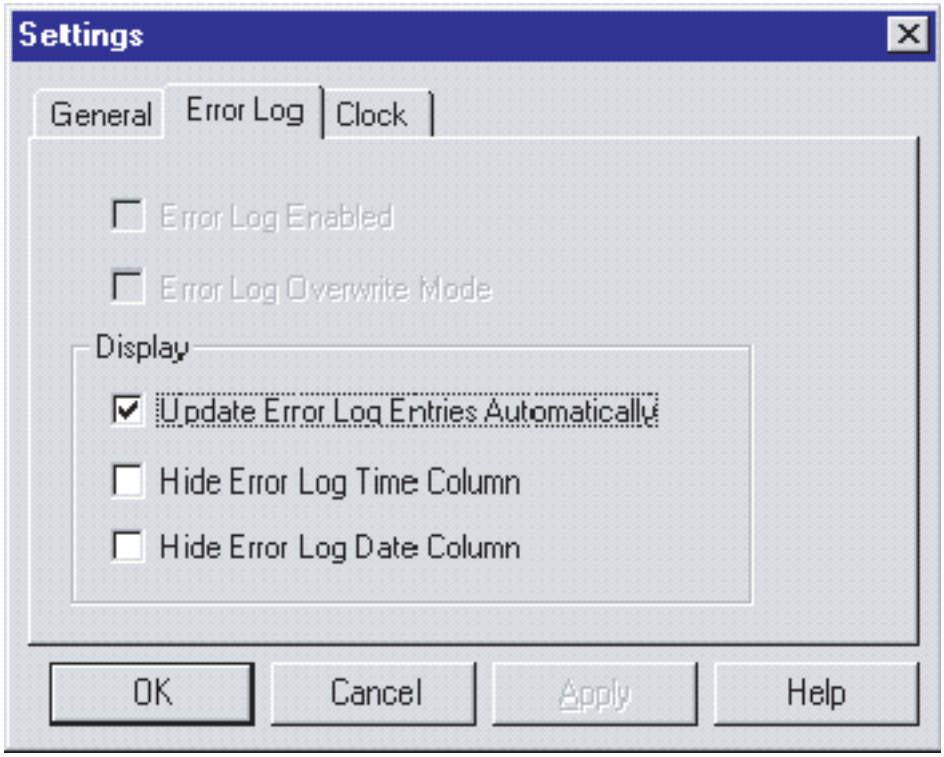

- **Update Error Log Entries Automatically** will automatically refresh the error log.
- **Hide Error Log Time Column** will hide the time display of the error log.
- **Hide Error Log Date Column** will hide the date display of the error log.

Clock Tab Settings

Select the **Clock** Tab from the **Settings** Dialog Box.
The following screen will be displayed.

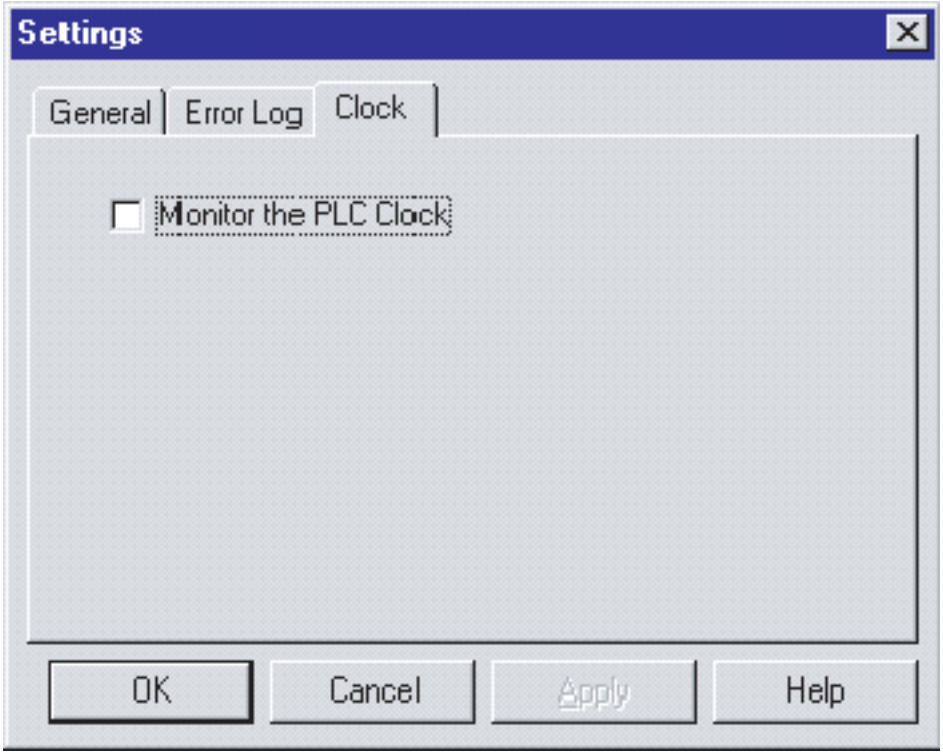

- **Monitor the PLC Clock** will monitor and display the PLC clock on the bottom right of the **PLC Errors** Window as shown below.

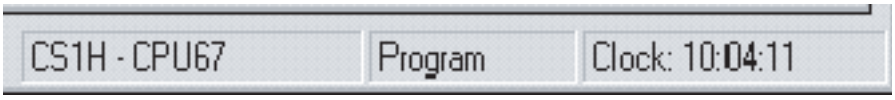

SECTION 14
Troubleshooting

This section lists the error messages and describes their causes and remedies.

Error Messages

The following error messages are listed alphabetically.

	Error Message/Symptom	Cause	Action
A	Aborting compare. PMSU is not valid for any of the selected protocols.	The target PMSU for all the selected protocols is not valid.	Set a suitable target PMSU.
	Aborting download. PMSU is not valid for any of the selected protocols.	The target specified within all selected protocols is not valid.	Change the Target setting to a valid PMSU.
	Address is larger than the selected data area size.	Effective starting address out of permitted range for a selected area.	Change the effective starting address so it is within range demonstrated by the error message.
	Another application has locked access to the PLC. Cannot complete the operation.	Another application has locked access to the PLC or CX-Protocol has not become the condition to gain the access rights of the PLC.	Release the access rights of the PLC from Another application. Disconnect from the PLC and then connect to the PLC again.
C	Can not select O1 or O2 when variable type is write.	The address O1 or O2 has been selected for a Write channel type. This is not permitted.	Select a different address for a Write channel type.
	Cannot accept a negative number in this field.	A negative number has been entered.	Enter a positive number.
	Cannot download Protocol(s) to the PMSU: Too large Protocol size: xxx PMSU Memory Size: yyy	The protocol data selected for download to the PMSU is in excess of the capacity of the PMSU.	Ensure the Include Source Information option is not set and try again.
	Cannot edit PC – PLC comms settings while CX-Net is open	Attempting to change PLC settings which CX-Net is active.	Close CX-Net and retry.
	Cannot open/create another project. The maximum number of projects are already open.	The current CX-Protocol session has the maximum number of projects open.	Close one or more projects and try again.
	Cannot perform trace operation using PMSU configuration.	The selected port is not correctly set up for Protocol Macro operation.	Set the port setting to Protocol Macro mode for the selected port.
	Cannot proceed – connected to Wrong PLC...	The connected PLC does not match the PLC settings.	Select a different PLC.
	Cannot set a repeat count of zero.	The Repeat count specified is invalid.	Enter a valid value.
	Channel number is larger than the selected data area size...	A Channel Number has been entered for the Repeat Counter that is outside the range for the selected Channel area.	Enter a valid Channel Number.
	Check Code <c> defined in message but no check code area selected.	A Check Code <c> entry has been made in the Message Data dialog, but the check code has not been specified for an appropriate entry.	Specify a Check code area to an entry.
	Combination of address and length extend beyond the selected data area.	Attempting to specify a Length or an effective address that is larger than the data area.	Enter valid data.
	Communications Port Settings download failed.	Communications have failed.	Retry the connection or cancel the dialog and check the PC to PLC communications settings.
	Compare Error.	Communications have failed.	Check the connection to the PLC and try again.
	Contention Send Request Code not valid.	The Contention Send Request Code has been selected but not entered.	Enter the Contention Send Request.
	CX-Server failed to initialize.	CX-Protocol could not initialize the communications driver CX-Server and cannot function properly.	Exit the application and try again. If the failure continues, reboot the computer and try again. If the failure persists, reinstall CX-Protocol.

	Error Message/Symptom	Cause	Action
D	Delimiter send code not valid/ Delimiter receive code not valid.	The Delimiter Send Request Code or Delimiter Receive Request Code has been selected but not entered.	Enter the Delimiter Send Request or Delimiter Receive Request code.
E	End Sequence number must be greater than the Start Sequence.	The sequence end value must be greater than the sequence start value.	Enter a sequence end value greater than the sequence start value.
	Error displaying the Data Monitor.	An error has occurred with the CX-Server communications driver.	Reinstall CX-Server.
	Error displaying the Error Log.	An error has occurred with the CX-Server communications driver.	Reinstall CX-Server.
	Error displaying the IO Table.	An error has occurred with the CX-Server communications driver.	Reinstall CX-Server.
	Error occurred during the upload of Trace data from the PMSU.	A communications error occurred while uploading the trace data.	Retry the upload operation.
		Attempting to upload a trace without the expected response from the PMSU.	Check the connections and try again.
	Error: Could not run the compiler for target...	The protocol data selected for download could not be compiled prior to download.	Check the connections and PMSU settings and try again.
	Error: No valid compiler for target...	The protocol data selected for download could not be compiled prior to download because of no compiler module in the application folder.	Install CX-Protocol and try again.
	Expression constant/factor value is outside the permitted range...	A primary expression constant/coefficient in variable has been entered exceeding allowed value.	Enter a valid expression constant/coefficient demonstrated by the error message.
F	Failed to connect to the PLC.	Communications have failed.	Retry the connection or cancel the dialog and check the PC to PLC communications settings.
	Failed to create the Data Monitor OCX...	An error has occurred with the CX-Server communications driver.	Reinstall CX-Server.
	Failed to create the Error Log OCX...	An error has occurred with the CX-Server communications driver.	Reinstall CX-Server.
	Failed to create the IO Table OCX...	An error has occurred with the CX-Server communications driver.	Reinstall CX-Server.
	Failed to gain the access rights of the PLC.	Attempting to download to protected PLC without sufficient access privilege.	Release access right by using CX-Programmer.
		Another application has locked access to the PLC or CX-Protocol has not become the condition to gain the access rights of the PLC.	Release the access rights of the PLC from Another application. Disconnect from the PLC and then connect to the PLC again.
	Failed to load help contents.	The help file associated with CX-Protocol is missing from the application folder.	Locate the help file and move back to application folder. If the help file cannot be found, reinstall CX-Protocol.
	Failed to open communications with the PLC. The device may be busy.	Communications have failed.	Shut down any other application that may be accessing the PLC or switch them offline.
	Failed to Open the CX-Server project file	Connection has failed.	Reboot the computer and try again.
	Failed to release the access rights of the PLC.	Attempting to upload to protected PLC without sufficient access privilege.	Obtain the correct password or select a different PLC.
	Failed to save the CX-Server project file	Connection has failed.	Reboot the computer and try again.
G	Goto number is too large.	The GOTO setting is invalid.	Enter a valid value.

	Error Message/Symptom	Cause	Action
I	Incorrect object code specification ... on unit ...	CX-Protocol does not support connected Protocol Macro specification or CX-Protocol does not recognize the PMSU.	Try a different PMSU or establish connection with PLC again.
	Interrupt number is larger than the maximum allowed value...	Interrupt Address longer than the maximum.	Change the Interrupt Address so it is within the permissible range demonstrated by the error message.
	Invalid constant data – Setting message address type to NONE.	Constant ASCII or Constant selected for Address <a> but no valid data entered.	Specify valid constant type and enter valid data again.
L	Length <l> defined in message but no length area selected.	A Length <l> entry has been made in the Message Data dialog, but the length has not been specified for an appropriate entry.	Specify a Length area to an entry.
	Length is larger than the maximum allowed values...	Link Channel Address length longer than the maximum of 128 words.	Change the Length so it is within the permissible range demonstrated by the error message.
M	Maximum items within message data is 96.	Too many items have been supplied to the message data.	Reconfigure the message data so the items limit is not exceeded.
	Maximum number of communication sequences already created.	The protocol limit of sequences has been reached.	Reconfigure the project to ensure the problem is not encountered in the future. For instance, move sequences to another protocol.
	Maximum number of protocols already created.	The project limit of protocols has been reached.	Reconfigure the project to ensure the problem is not encountered in the future.
	Maximum of 300 messages per protocol.	The protocol limit of Send/Receive messages has been reached.	Reconfigure the project to ensure the problem is not encountered in the future. For instance, create a new protocol for the additional messages.
N	Name already in use! Choose another name or ESC to cancel edit.	A name has been supplied to a setting which is identical for an existing setting.	Specify a different name in the specified protocol.
	No sequence numbers available within this protocol.	The protocol limit of sequences has been reached.	If required, reconfigure the project to ensure the problem is not encountered in the future. For instance, move sequences to another protocol.
	No sequence numbers available within this protocol...	The sequence start and sequence end of a protocol does not permit the addition of new sequences.	Increase the range of the sequence start and sequence end for the protocol and try again. Increase the sequence end first.
	No valid header data – setting header data type to NONE.	Header <h> dialog has been selected but no valid data entered.	Enter valid data.
	No valid terminator data – setting terminator data type to NONE.	Terminator <t> dialog has been selected but no valid data entered.	Enter valid data.
O	One or more of the PMSUs are not fitted to the currently selected PLC. Not all selected communications port settings will be downloaded.	The scope of the download port settings command includes one or more PMSUs that are not fitted.	Clear the error message. CX-Protocol will continue and download port settings to the PMSUs that are fitted.
	One or more of the PMSUs are not fitted to the currently selected PLC. Not all selected communications port settings will be uploaded.	The scope of the upload port settings command includes one or more PMSUs that are not fitted.	Clear the error message. CX-Protocol will continue and upload port settings to the PMSUs that are fitted.

	Error Message/Symptom	Cause	Action
O	Only 100 Matrices are allowed.	The protocol limit of matrices has been reached.	Reconfigure the project to ensure the problem is not encountered in the future. For instance, create a new protocol for the additional matrices.
	Only 16 Steps are allowed.	The limit of steps for a sequence has been reached.	Reconfigure the project to ensure the problem is not encountered in the future. For instance, move steps to another sequence.
P	PMSU does not support Protocol Macro. Download cannot proceed.	The selected PMSU does not support the Protocol Macro function.	Try a different PMSU.
	PMSU does not support Protocol Macro. Upload cannot proceed.	The selected PMSU does not support the Protocol Macro function or CX-Protocol does not recognize the PMSU.	Try a different PMSU or establish connection with PLC again.
	PMSU ... is not fitted to the currently selected PLC. Not all selected Protocols will be compared.	An attempt was made to compare protocols for a target PMSU that is not mounted.	Remove the protocol for which a non-mounted target PMSU is mounted from the protocols to be compared.
	PMSU ... is not fitted to the currently selected PLC. Not all selected Protocols will be downloaded.	One or more of the selected protocols contains a target PMSU not fitted to the PLC.	Continue with the download, but ensure the target setting for associated PMSUs are correct.
	Protocol compare failed.	Communications have failed.	Try again.
	Protocol list upload failed.	Communications have failed.	Retry operation.
	Protocol upload/download failed.	Communications have failed.	Retry operation.
	Protocol.spp was not found.	The file protocol.spp is not in application folder.	Locate protocol.spp and move back to application folder. If protocol.spp cannot be found, reinstall CX-Protocol.
	....psw was not found.	An attempt was made to open file project.psw from the Recently Used File List from the File Menu, but project.psw no longer exists in that folder.	Locate and open project.psw.
R	Repeat count is larger than the maximum allowed value...	A value greater than 255 has been entered for the Repeat Counter constant.	Enter a valid value demonstrated by the error message.
S	Sequence End Number out of range because a sequence exists with a greater sequence number.	The sequence end value is invalid.	Enter valid data for the Seq End setting.
	Setting the Start Sequence to this value will cause the Sequence to exceed its maximum limit...	The sequence start value is invalid.	Reduce the sequence value or reduce the sequence range.
T	Target for protocol ... must be set.	A target must exist for a protocol.	Specify a target PMSU for the protocol.
	Total number of IN and OUT channels, for Link Channel Areas 1 and 2 combined, should be ...	The total length is beyond the limit.	Change the starting address and/or the Length so that they are within the permitted range as demonstrated by the error message.
	The CX-Server project file is invalid, cannot proceed.	Connection has failed.	Reboot the computer and try again.
	The Length must be between 1 and 256.	The Length specified is out of range.	Enter a valid value.
	The PLC must be in PROGRAM mode to download the Protocol to the PMSU...	Attempting to download protocols to the PMSU while in “Run” mode or “Monitor” mode.	Select the Yes Button to switch the PLC to “Program” mode.

	Error Message/Symptom	Cause	Action
T	The PMSU Protocol password has not been correctly entered. The PMSU transfer cannot proceed.	The protocol in the PMSU has a password assigned to it. An incorrect password has been entered.	To upload the protocol from the PMSU or to download a new protocol to the PMSU, type in the correct password.
	The PMSU contains no protocol data.	Uploading a protocol list from a PMSU that contains no protocols.	Download protocols to the PMSU.
	The PMSU does not support the PMCR instruction.	The selected PMSU does not support the Protocol Macro function.	Try a different PMSU.
	The PMSU has a Sum Check Error. The transfer cannot proceed.	The selected PMSU has a sum check error. The upload of protocols or protocol list cannot proceed.	Download protocols to PMSU to clear sum check error and try again.
	The PMSU has a Sum Check Error. The Protocol download will proceed anyway.	The selected PMSU has a sum check error.	Proceed with the download to clear the error.
	The PMSU protocol password has not been entered. The PMSU transfer cannot proceed.	The user cancelled the password entry.	Retry the operation and enter the correct password.
	The Unit Number must be between 0 and 31.	The Unit Number specified is out of range.	Enter a valid value.
	The communications port settings for this port are currently being changed by another device...	A Programming Console may be accessing the PLC.	Check the new port settings and try again.
	The following list of item(s) have references to the selected object which you tried to Delete / Cut. Remove all references first.	Attempting to remove a matrix or message from the project that is referred to by steps within the project.	Check the message or matrix references within each step that refers to each message/matrix. If desired, remove the step and try again.
	The maximum length must be between 200 and 1000 bytes.	The specified communications port setting is out of range.	Enter a valid value.
	The PLC must be in PROGRAM mode to download the communications port settings.	An attempt was made to download the communications port settings to the PMSU while the PLC was set to a mode other than PROGRAM mode.	Change the operating mode of the PLC to PROGRAM mode.
	The sequence number is already in use by	The sequence number specified is the same as another sequence.	Specify a sequence number not used by the other sequences in the protocol.
	The sequence number must be in the range xxx to yyy inclusive...	The sequence number is out of range.	Increase the range of the sequence by changing the sequence start or end numbers for the protocol. Increase the sequence end first.
	There is no Communications Trace in progress on this port.	Attempting to stop a trace before it has started for the selected port.	Start a new trace. Check connections.
	There is no Trace data available for the specified Port.	Attempting to access trace data for a port that has no trace data.	Start a new trace for that port.
	This protocol cannot be found and cannot be downloaded to the PMSU.	Object code temporary file is corrupt.	Try compiling/downloading again.
	This protocol file is of zero length and cannot be downloaded to the PMSU.	Object code temporary file is corrupt.	Try compiling/downloading again.
	Transfer failed.	Communications have failed.	Check the connections and try again.

	Error Message/Symptom	Cause	Action
U	Unable to complete protocol compare.	Communications have failed.	Check the connection to the PLC and try again.
	Unable to complete protocol upload.	Communications have failed.	Check PLC connections and try again.
	Unable to establish communications to the PMSU ...	Communications have failed.	Check the PMSU installation and try again as demonstrated by the error message.
	Unable to establish communications to the selected PLC...	Communications have failed.	Check connections and baud rate setting.
	Unable to register PLC Devices ...	Communications have failed.	Retry the connection or cancel the dialog and check the PC to PLC communications settings.
	Unexpected file format	An attempt was made to open a file that cannot be opened with the CX-Protocol.	Check that the file format is one that can be opened with the CX-Protocol.
W	Warning ... ? ... The selected PLC does not support the Protocol Macro function. Connection to the device from CX-Protocol will not be allowed.	A PLC has been selected that does not support Protocol Macro function.	Select a different PLC.

Errors

Symptom	Cause	Action
PLC Error light.	C200HX/HG/HE: If FAL code is 9C, Communication Board error occurs. CS/CJ: If A40208 is ON, Inner Board error occurs.	C200HX/HG/HE: check 268CH value by referring page 140 in this manual. CS/CJ: check A424CH value by referring page 140 in this manual.
PMSU RDY light flashing.	PMSU Error.	Confirm downloaded protocol and download again.
Unexpected delay transferring protocols to or from the PMSU.	Either: more data is being transferred than was expected; communications have failed; slow performance computer.	Disconnect the cable to stop the transfer.
Unable to find a file to open from the Open dialog.	The Open dialog is not displaying the correct folder and/or file type.	Check the folder name described in the Look in: field is the right folder. Check the file type described in the Files of type: field.
Start, Stop and Upload Trace operations disabled on buttons menu.	The PLC is offline or the PMSU trace is not selected.	Re-establish PLC communications or select the PMSU Trace Port.

Error Messages in Output Window

Error/Warning in Output Window	Description
E1001: ... Total Link Channels out of range...	The Link Channel setting is invalid.
E1005: No data in message.	A message contains no data.
E1006: Check code <c> after Terminator <t> not supported on this unit.	The target unit does not support message data that includes a Check Code <c> after a Terminator <t>.
E1007: Check code <c> ~LRC not supported on this unit.	The target unit does not support message data that includes a ~LRC Check Code <c>.
E1008: Check code <c> ~CCITT not supported on this unit.	The target unit does not support message data that includes a ~CCITT Check Code <c>.
E1009: Check code <c> CRC16 not supported on this unit.	The target unit does not support message data that includes a CRC16 Check Code <c>.
E1010: Check code <c> ~SUM (1 byte) not supported on this unit.	The target unit does not support message data that includes a ~SUM (1-byte) Check Code <c>.
E1011: Check code <c> ~SUM (2 bytes) not supported on this unit.	The target unit does not support message data that includes a SUM (2-byte) Check Code <c>.
E1012: Check code <c> SUM2 (1 byte) not supported on this unit.	The target unit does not support message data that includes a SUM2 (1-byte) Check Code <c>.

Error/Warning in Output Window	Description
E1013: Check code <c> SUM2 (2 bytes) not supported on this unit.	The target unit does not support message data that includes a SUM2 (2-byte) Check Code <c>.
E1014: Overlap in sequence range with protocol...	A sequence's start and end settings conflict with another protocol which is being compiled.
E1022: Communication Sequence contains no step data.	A sequence exists but has no steps.
E1026: Step contains invalid command.	Invalid command setting in step
E1035: Link Channel out of range.	Alpha protocols only error. The Link Channel setting is out of range.
E1037: Repeat Counter contains invalid channel.	Alpha protocols only error. The Repeat Counter contains a channel out of range.
E1042: Length part primary expression constant out of range.	Alpha protocols only error. Part of the Length primary expression is out of range.
E1043: Object code too large...	The amount of data to be downloaded is too large.
E1044: Matrix Goto out of range.	The GOTO setting within a matrix is out of range.
E1045: Matrix next statement out of range.	The Next setting within a matrix is used by the last step in a communication sequence.
E1048: Protocol contains no message data.	A protocol contains no message data.
E1049: Protocol contains no communication sequences.	A protocol contains no sequences.
E1050: Step contains invalid message/matrix reference	A message has not been specified in a step requiring a message.
E1051: PLC xxx CPUyy does not support EM banks.	Information including EM data areas has been supplied for download to a PLC which does not support EM data areas.
E1052: PLC xxx CPUyy supports zz EM banks.	Information including EM data areas has been supplied for download to a PLC which supports EM data areas but exceeds number of EM bank.
E1053: Link Word IN1 is not defined or invalid.	Link channel I1 is specified in message but not specified in Link channel information or invalid setting in Link channel information.
E1054: Link Word OUT1 is not defined or invalid.	Link channel O1 is specified in message but not specified in Link channel information or invalid setting in Link channel information.
E1055: Link Word IN2 is not defined or invalid.	Link channel I2 is specified in message but not specified in Link channel information or invalid setting in Link channel information.
E1056: Link Word OUT2 is not defined or invalid.	Link channel O2 is specified in message but not specified in Link channel information or invalid setting in Link channel information.
E1058: Area xxx Channel yyy out of range ...	Channel address is out of range for target PLC.
E1060: Check code <c> LRC2 not supported on this unit.	CS/CJ protocols only error. The Check Code type is invalid for PSB.
E1061: Check code <c> SUM1 (1byte) not supported on this unit.	CS/CJ protocols only error. The Check Code type is invalid for PSB.
E1062: Check code <c> SUM1 (2 byte) not supported on this unit.	CS/CJ protocols only error. The Check Code type is invalid for PSB.
E1063: Header <h> found after Terminator <t>.	Error by protocol imported from PSS. PSS allows to create the message prohibited by CX-Protocol.
E1064: Header <h> not at the start of the message.	Error by protocol imported from PSS. PSS allows to create the message prohibited by CX-Protocol.
E1065: Terminator <t> not at the end of the message / before check code <c>	Error by protocol imported from PSS. PSS allows to create the message prohibited by CX-Protocol.
W0006: Protocol will be converted.	A CS/CJ protocol will be downloaded to a C200HX/HG/HE PLC, or a C200HX/HG/HE protocol will be downloaded to a CS/CJ PLC.

SECTION 15
Help

This section describes the online help services.

Help by Topic

Procedures for using the CX-Protocol and protocol macro functions can be verified using the online help. Use either one of the following procedures to access the online help.

Using the Help Tab

The desired help screen can be displayed by left-clicking the **Help** Menu.

Using the Help Icon

Left-click the **Help** Icon on the toolbar or press the **F1** Key to display a help screen for an item (element) on the screen.

CX-Protocol Version

Use the following procedure to find out the version of CX-Protocol.

1,2,3...

1. Select **About CX-Protocol...** from the **Help** Menu or left-click the **About** Icon on the toolbar.
2. The **About CX-Protocol** dialog will be displayed. This dialog provides the CX-Protocol copyright and version number.

Appendix A
Creating the Protocol Applications

Communication between PLCs via Modems: Example

In this appendix, a protocol is created which initiates communications between PLCs via a telephone line using modems. The connection structure and the flow of the protocol creation procedure are as shown below:

Connection Structure

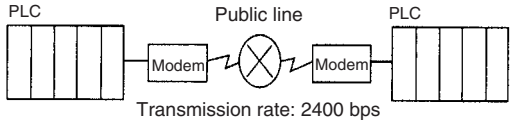

Protocol Creation Procedure

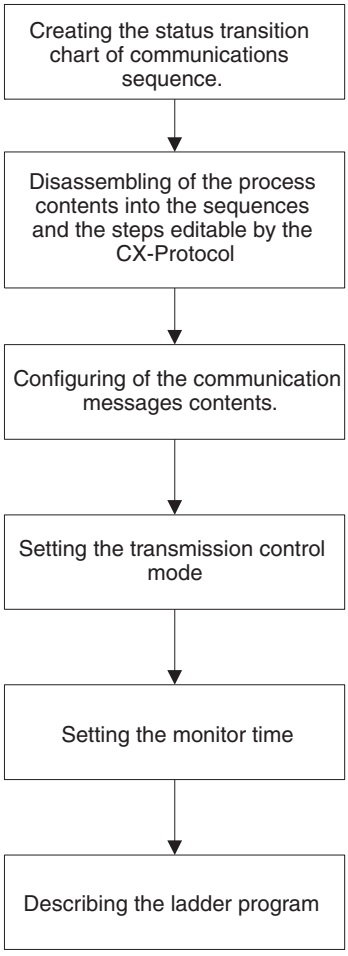

Creating the Status Transition Chart of Communications Sequence

When the data sending and receiving between PLCs are conducted via a telephone line using modems, the outline of the communications sequences is as shown below:

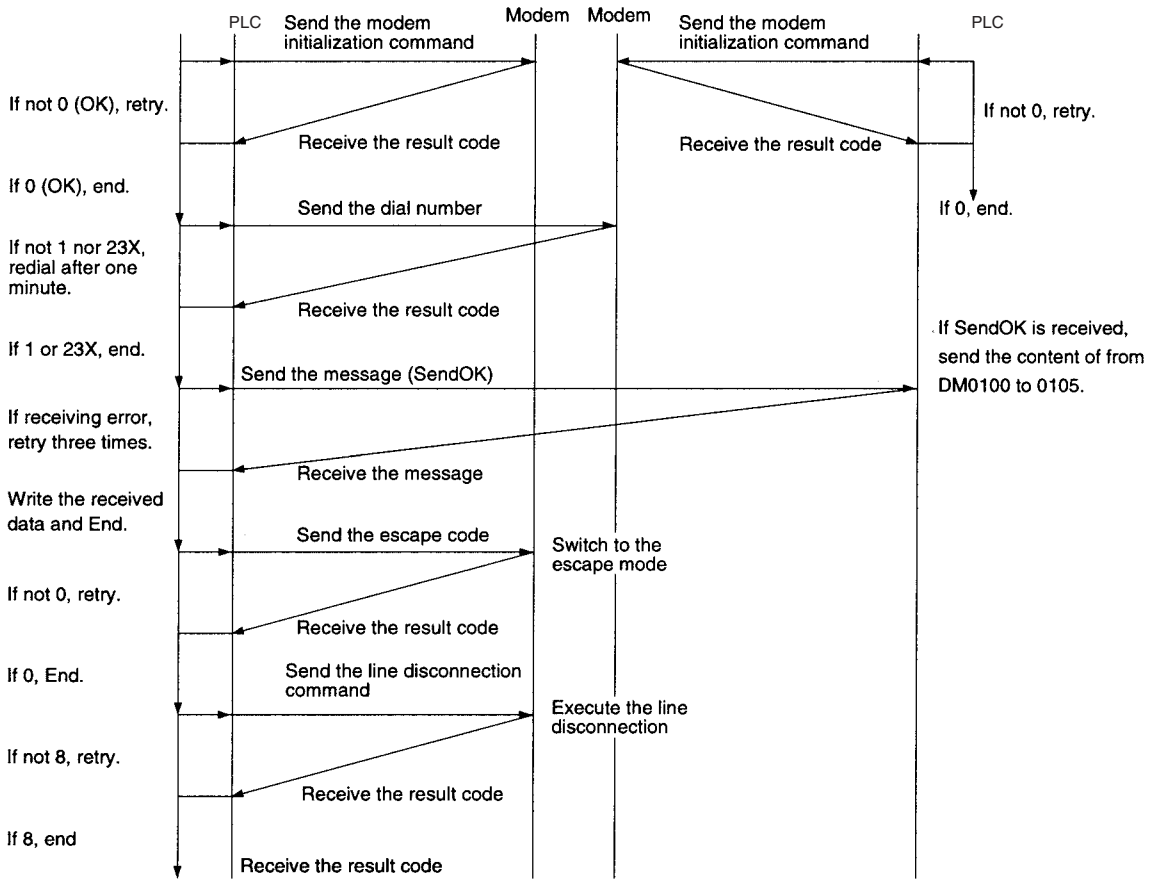

Note Information about the AT commands to be sent to the modem i.e. the initialization command, dial command, escape code sending, line disconnection command, etc. and result codes (response) is described in the manual of the modem in use. The modem used in this example is MD24FB10V (made by OMRON). AT commands and result codes supported by the modem are listed in the following tables.

List of Commands Used in this Example

AT command	Setting item	Settings
Modem initialization ATE0V0X4\V2\N3%CO*CO\X1	Command echo	Not available
	Result code display format	Numerical
	Speed display when connection has been completed	Available
	Busy, dial tone detection	Available
	Display of error corrections and compressed data when connection has been completed	Available
	MNP setting	Available (auto reliable mode)
	MNP class	Class 4
	V.42 compression, error setting	Not available
	Flow control between terminal modems	Not available
	DTR signal control	Always ON
	Escape code	+
Dial command ATDT dial number	Dial class	Tone
Escape signal code transmission +++	Mode selection	Online mode to escape mode
Line off command ATH0	Line off	

List of Result Codes

Numerical format	Character format	Content
0	OK	Properly ended
1	CONNECT	Connection completed
2	RING	Signal receive detection
3	NO CARRIER	Line off
4	ERROR	Command error
5	CONNECT 1200	Connection to 1,200 bps
6	NO DIAL TONE	No-dial-tone detection
7	BUSY	Busy detection
8	NO ANSWER	No answer detection
9	HAND SET IN USE	Busy
234	CONNECT 2400/REL4	Connection to 2400 MNP class

Disassembling of the Process Contents into the Sequences and the Steps Editable by the CX-Protocol

First, the above communications sequences are disassembled into the following sequences by the process block.

Sequence No. 000: Modem initialization
001: Dial operation
002: Send message/Receive data, switch modes, line disconnection

Then, the steps are configured for each sequence.

Sequence No. 000: Modem Initialization

Step No. 00

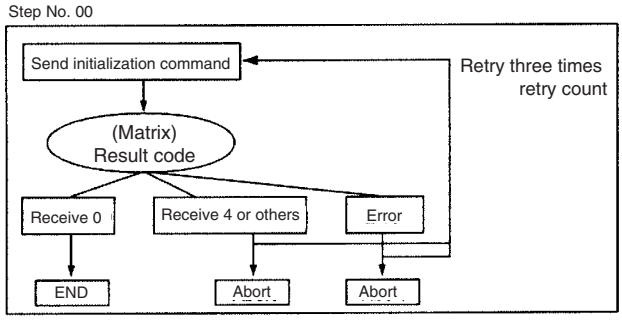

Normal

The system sends the modem initialization command and waits the result code from the modem. Since there is more than one result code, the following matrix is set:

0: End for the normal end of the initialization.

4: This is a command error. The cause will be a wrong setup for the initialization command. The abort and the correct setup for the initialization command are necessary.

Other: Abort.

Note Even though the next process of “4” (command error) is same with that of “Other,” it is set as a separate matrix case. This is because the checking of the matrix number from the flag at an error occurrence allows the confirmation of the error cause and easier debugging.

Abnormal

By the setting of the retry count (three times), the system automatically retries the same step up to three times at the following error occurrences:

- The send finish monitoring time Tfs, the receive wait monitoring time Tr, or the receive finish monitoring time Tfr is up.
- A transmission error (CIO28304 or 28312 is ON) occurs upon receiving.
- Wrong receive message
- An error occurs in the error check code

If the initialization fails even after the maximum three retry times, it will be handled by the error process.

An error at this stage may be caused by wrong PLC Setup or wrong wiring, in which case it cannot be handled by the step description. Therefore, the abort is set for this error process.

Sequence No. 000: Modem Initialization

Step No.	Repeat counter	Command	Retry count	Send wait	Send message	Receive message		Response type	Next process	Error process
00	R/001	Send&Receive	3	---	Initialization Command	0	End	---	---	Abort
						4	Abort			
						Other	Abort			

Note The partner machine creates similar steps and executes the initialization of the local modem.

Sequence No. 001: Dial Operation

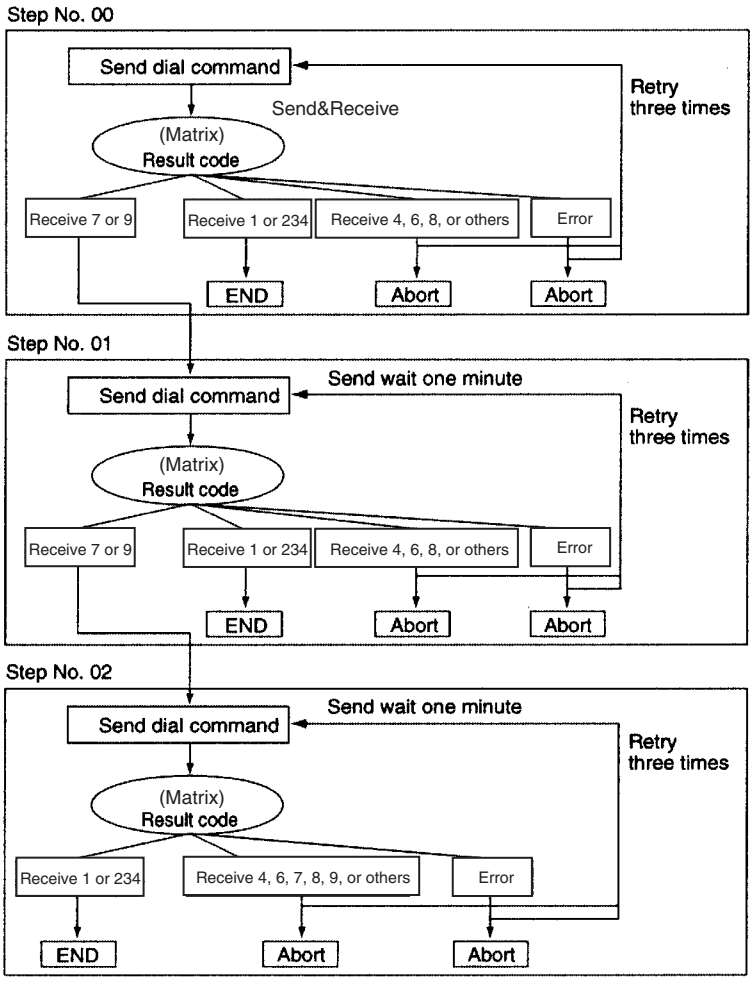

Normal

When the modem is initialized, the system dials the telephone number and secures the communication line with the partner PLC. Besides the line connection completion “1 (CONNECT),” there are several result codes for the dial command. For example, 7 (BUSY) is the connection failure because of the busy line. In this case, if the other step (to redial after one minute) is configured by designating its step number with “goto,” the sequence execution will not be aborted but can be continued.

1 (CONNECT):	Line connection completion	End
4 (ERROR):	Command error	Abort
	Confirm the contents of the dial command setup	
6 (NO DIALTONE):	No dialtone detected	Abort
	Confirm the dial type (tone or pulse)	
7 (BUSY):	Connection failure for the busy line.	
	Redial after one minute	Goto01
8 (NO ANSWER):	No answer tone detected	Abort
	Confirm if the partner modem is receivable.	
9 (HAND SET IN USE):	Connection failure for the telephone calling.	
	Redial after one minute	Goto01
234 (CONNECT 2400/REL4):	Line connection completion	End
Others:	Abort	

Note In the second and later retry process executions, the send wait time is ignored. Therefore, another step 01 is created whose send wait time is one minute when the result code is 7 (BUSY). Thus the retry process should not be set within a process that requires the send wait time.

Abnormal

Errors other than that caused by the matrix may be caused by wrong modem's transmission rate or abnormal line status. Since a step description cannot avoid these errors, it is necessary to abort and to confirm the transmission rate and line condition when the communication fails, even in the third retry.

Sequence No. 001: Dial Operation

Step No.	Repeat counter	Command	Retry count	Send wait	Send message	Receive message		Response type	Next process	Error process
00	R/001	Send&Receive	3	---	Dial number	1	End	---	---	Abort
						4	Abort			
						6	Abort			
						7	Goto01			
						8	Abort			
						9	Goto01			
						234	End			
						Other	Abort			
01	R/001	Send&Receive	3	One minute	Dial number	1	End	---	---	Abort
						4	Abort			
						6	Abort			
						7	Goto02			
						8	Abort			
						9	Goto02			
						234	End			
						Other	Abort			
02	R/001	Send&Receive	3	One minute	Dial number	1	End	---	---	Abort
						4	Abort			
						6	Abort			
						7	Goto01			
						8	Abort			
						9	Goto01			
						234	End			
						Other	Abort			

Send OK Message Sending/Data Receiving, Mode Switch, Line Disconnection (Sequence No. 002)

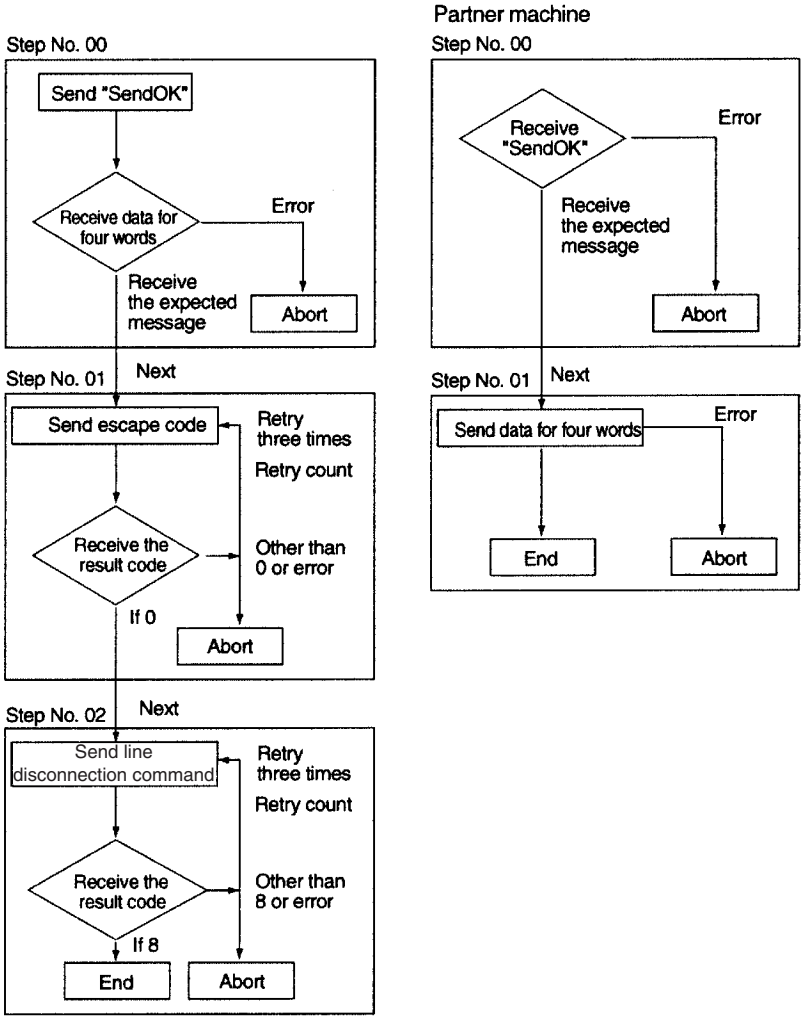

Normal

When the connection with the communications partner is established, the system sends the message (SendOK) and waits the data from the partner machine. The communications partner sends four words of data stored in DM 0100 to DM 0104 after the receipt of the “SendOK” message.

When the system receives the four words of data, it writes them from DM 0200, and sends the escape code (+++) after the end of reception. Then, it switches the escape mode to receive the AT command from the online mode and sends the line disconnection command.

Abnormal

Most errors here are presumed to be a time-up error of the monitoring time, receiving error on the transmission, wrong message reception, or error check code error. For these errors, the retry process is set to three times. If another error occurs, the system will abort and check the modem’s transmission rate and line condition.

Following are configurations of both steps:

(The sequence configuration of the sending PLC)

Sequence No. 002: Message Sending, Data Receiving, Mode Switch, and Line Disconnection

Step No.	Repeat counter	Command	Retry count	Send wait	Send message	Receive message	Response type	Next process	Error process
00	R/001	Send&Receive	3	---	SendOK	Writing from DM0200 (W(1), 8)	---	Next	Abort
01	R/001	Send&Receive	3	---	Escape code	0 (result code)	---	Next	Abort
02	R/001	Send&Receive	3	---	Line disconnection command	8 (result code)	---	End	Abort

(The sequence configuration of the receiving PLC.)

Sequence No. 000: Message Receiving and Data Sending

Step No.	Repeat counter	Command	Retry count	Send wait	Send message	Receive message	Response type	Next process	Error process
00	R/001	Receive	3	---	---	SendOK	---	Next	Abort
01	R/005	Send	3	---	Contents of four words starting from DM0101 (R(1), 8)	---	---	End	Abort

Configuring the Communication Messages Contents

For the communications messages setup, the send and receive data storing mode and the message format must be set up.

Send and Receive Data Storing Mode

There are four kinds of send and receive data storing modes as follows:

- Constant addressing
- Operand addressing (with/without response type)
- Link word addressing
- Direct addressing

In this example, each mode is differentiated according to the characteristics of communications data as follows:

Communications data	Feature	Storing method
Initialization command	It is directly set up in the message because there is no need for change during use of the same modem.	Constant addressing
Dial command	It is desirable to be dynamically set up for a possible change in accordance with the environment.	Operand addressing
Send data (SendOK)	It is directly set up in the message because there is no need for change.	Constant addressing
Five words of send data	It is desirable to be dynamically set up for a possible change in accordance with the environment.	Operand addressing
Five words of receive data		
Receive result code	It is directly set up in the message because there no need for change during use of the same modem.	Constant addressing

Message Format

In the modem control procedure, communications are performed with an instruction (AT command) from a terminal (the PLC in this example) and the modem's response (result code) to the instruction. Since AT commands and result codes consist of a character string delimited by CR and CR/LF, the message format is as follows:

Data + Terminator (CR or CR/LF)

Note The header, the address, the length, and the error check code are not set.

Constant Addressing

In the constant addressing communications message, CR or CR/LF will be set at the end of the initialization command, send data (SendOK), receive result code, etc.

Example of the Initialization Command Setting:

Example of the Send Data (SendOK) Setting:

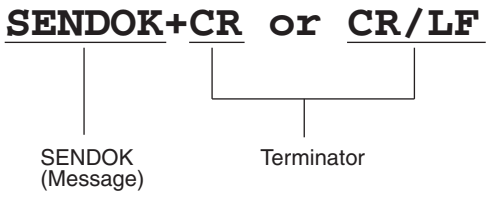

Example of the Result Code Setting:

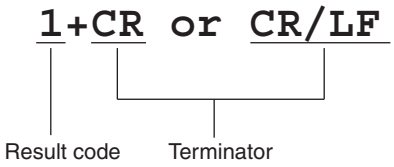

Operand Addressing

For the operand addressing communications data, the communications data must be stored in the area set by the PMCR instruction after PMCR instruction designation (both the first word numbers of the send data storing and the received data storing) are determined. The configuration of the operand addressing communications data used in this example is as follows:

Example of the Dial Command Setting:

- The send message content to be described in the step numbers 00 to 02 of the sequence number 001 for the PLC which sends SendOK message.

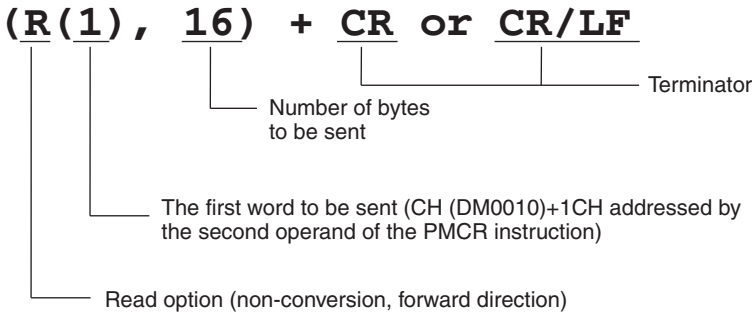

- Actual data sent and stored in the addressed word.

DM0010	DM0011	DM0012	DM0013	DM0014	DM0015	DM0016	DM0017	DM0018
0009	4154	4454	3033	2D30	3132	332D	3435	3637
9	AT	DT	03	–0	12	3–	45	67

Set in the first word is the total number of words of the data to be sent

Example of the Setting for Four-word Receive Data Stored in DM 0201 to DM 0204:

- The received message described in the step number 00 of the sequence number 002 for the PLC which sent the SendOK message.

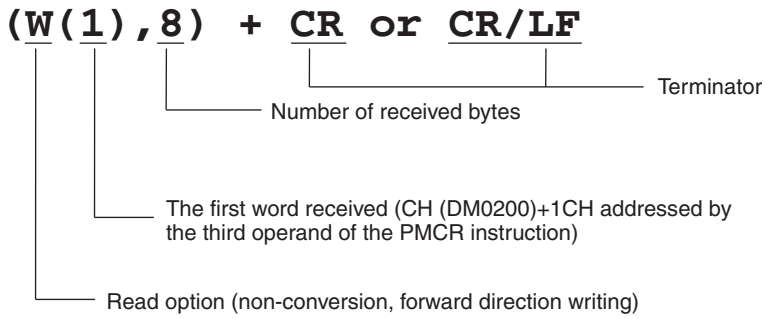

- The received data actually written in the addressed word.

DM0200	DM0201	DM0202	DM0203	DM0204
0005	3130	3135	3230	3532
5	10	15	20	52

Number of words to be received (set automatically)

Example of Setting for Four Words Data Sending (DM 0101 to DM 0104):

- The send message described in the step number 01 of the sequence number 000 for the PLC which receives SendOK message.

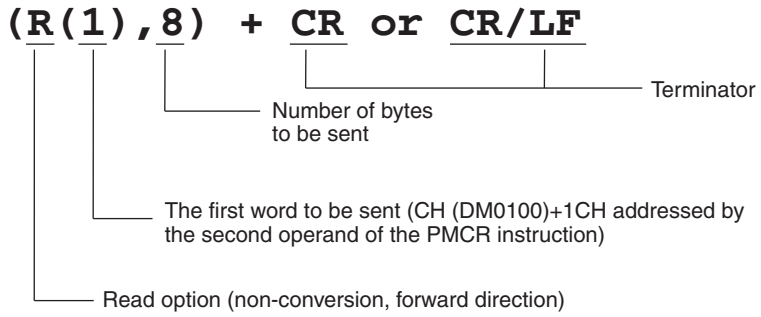

- The send data content to be actually stored in the addressed word.

DM0100	DM0101	DM0102	DM0103	DM0104
0005	3130	3135	3230	3532
5	10	15	20	52

Set the total number of words of the data to be sent

Setting the Transmission Control Mode

"Modem Control" is designated as the transmission control mode for the one-to-one communications between PLCs via modems. The modem control mode is held by the instructions from terminals (PLCs) and the modems' responses to the instructions. Those instructions (AT commands) and the responses (result codes) consist of a character string delimited by delimiters, CR and CR/LF.

For the modem control, the RTS/CTS flow control or the Xon/Xoff flow control can be set as a flow control. However, these flow controls are not set in this example because the communication messages are short.

Note 1. For the details of the setup method for the transmission control modes, refer to *3-2 Sequence Attributes (Common to All Steps)*.

2. The protocol is created by the Hayes-compatible AT mode in this example. The AT mode and V.25bis mode are also available for modem control.

Setting Monitoring Time

If the monitor time (send finish monitoring time: Tfs, receive wait monitoring time: Tr, and receive finish monitoring time: Tfr) has been set, the error will be detected and the process can be switched to the error process or the retry process immediately before the step finishes (in the send or receive step) when the send or receive process is not executed within the monitor time.

If used in the combination with the retry process, the step can be re-executed without any description of the error process and protocol or the ladder program description can remarkably be simplified when the following retry factors occur.

- The send finish monitoring time Tfs, receive wait time Tr, or receive finish monitoring time Tfr is up.
- A transmission error (CS/CJ: bit 15 in word 1908/1918/n+8/n+18 is ON, C200HX/HG/HE: 28304 or 28312 is ON) occurs upon reception.
- The received message is different from the one that was setup.
- An error occurs with the error check code.

In this example, the monitoring time is set as shown below. For the calculation method of the monitoring time, refer to *4-5 Calculation Method of Monitoring Time*.

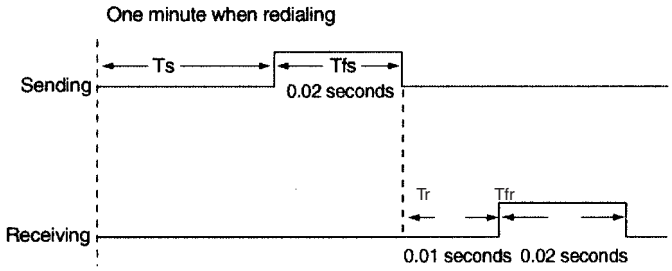

1. The retry count can be set only for steps in which Send&Receive command is set.
2. If both the repeat counter and the retry count are set, the counter will not increment while the step is being retried by the retry count number. When the retry factor is resolved or the step is executed by the retry count number, the counter will increment.

Creating the Ladder Program

The ladder program to execute the created protocol is described and transferred to the PLC. An example of the ladder program is shown below:

CS/CJ

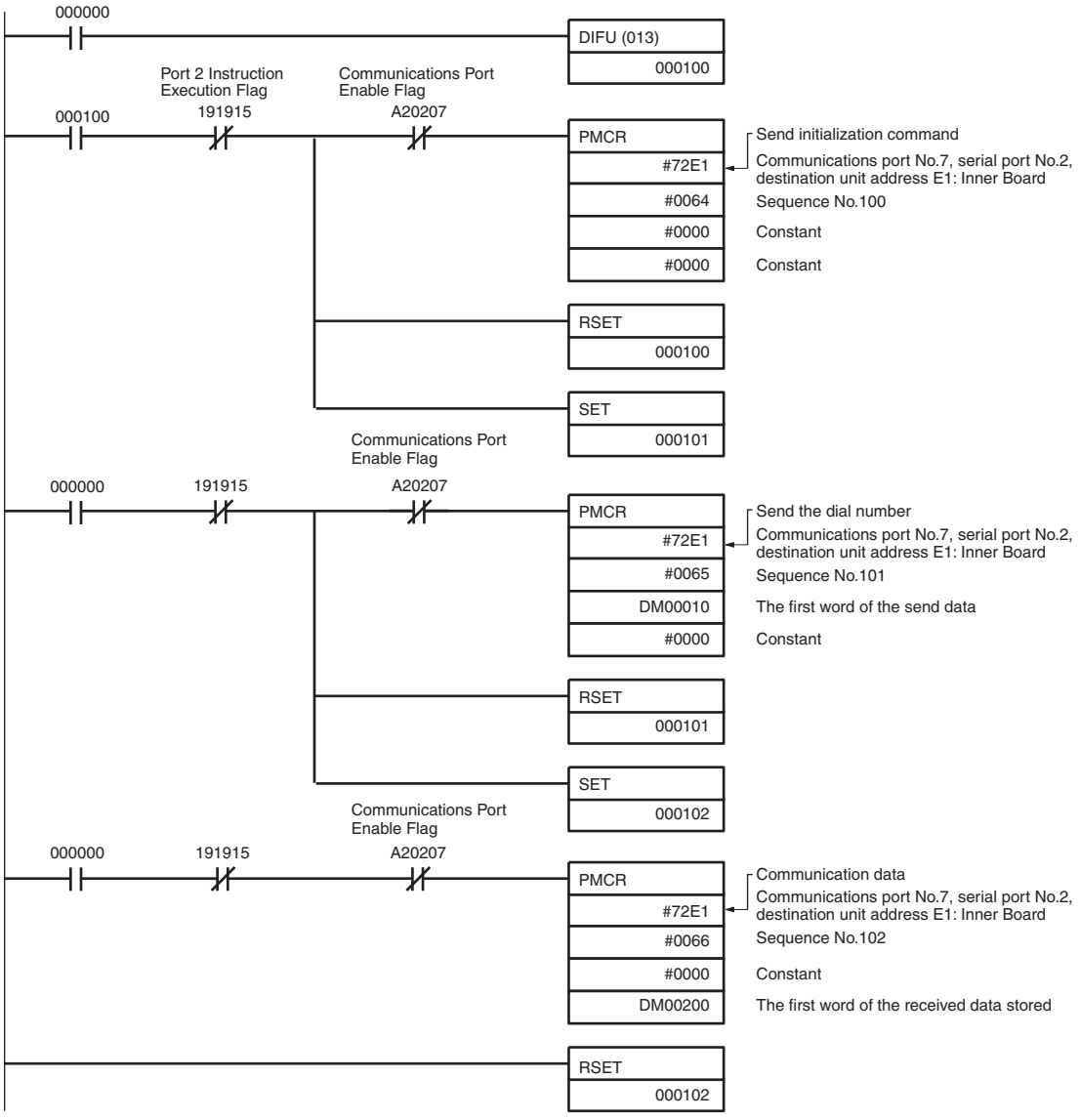

C200HX/HG/HE

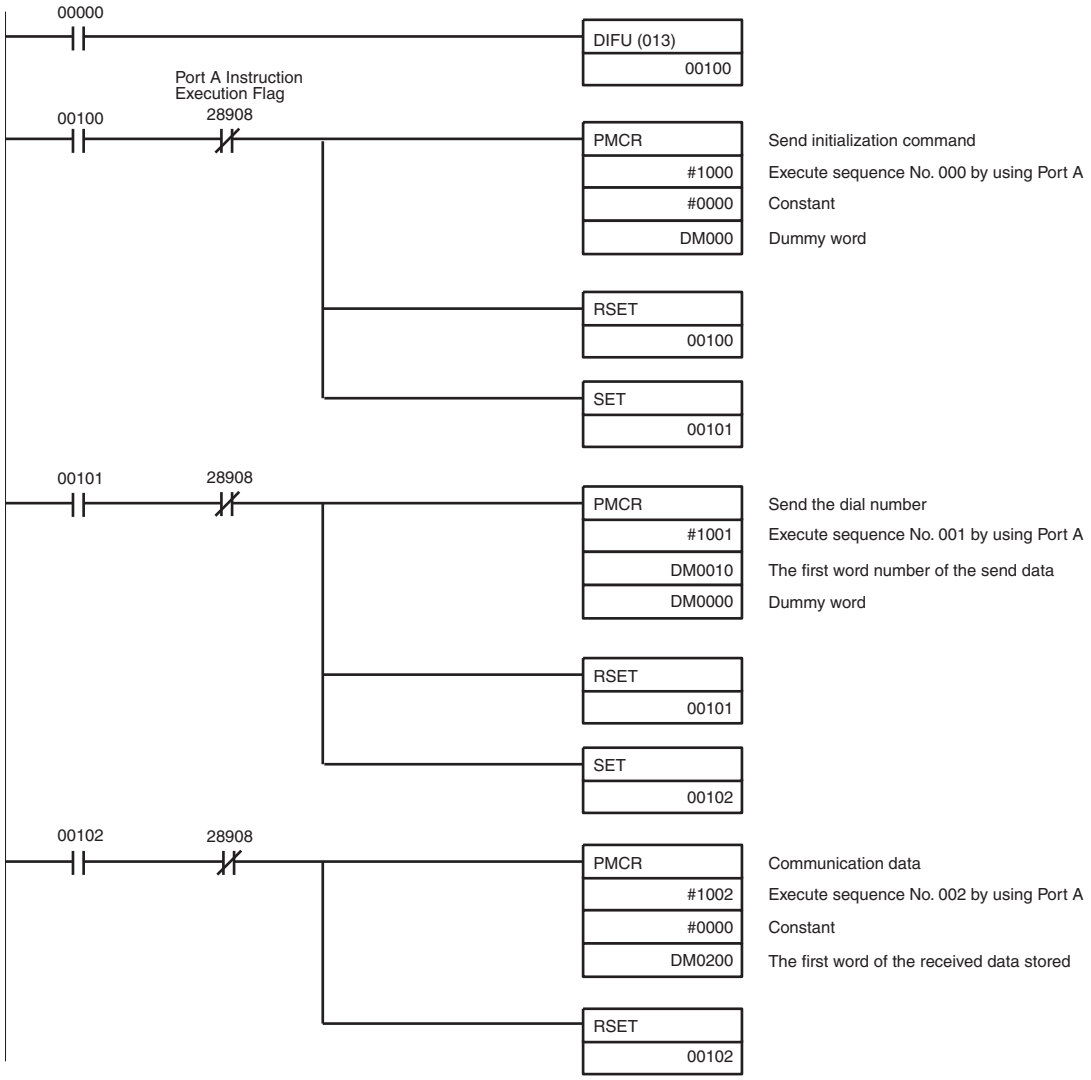
00000
DIFU (013)
00100
Port A Instruction
Execution Flag
28908
00100
PMCR
#1000
#0000
DM000
Send initialization command
Execute sequence No. 000 by using Port A
Constant
Dummy word
RSET
00100
SET
00101
00101
28908
PMCR
#1001
DM0010
DM0000
Send the dial number
Execute sequence No. 001 by using Port A
The first word number of the send data
Dummy word
RSET
00101
SET
00102
00102
28908
PMCR
#1002
#0000
DM0200
Communication data
Execute sequence No. 002 by using Port A
Constant
The first word of the received data stored
RSET
00102

Appendix B
PLC Setup and PMSU Settings

PMSU System Settings

CS/CJ

With the CS/CJ Series, PLC Setup settings for using a Serial Communications Board or a Serial Communications Unit in protocol macro mode are made in the allocated DM area of the PMSU.

Serial Communications Board

Allocated DM area: Use the following areas in words D32000 to D32099.

D32000 to D32001	PLC Setup settings for port 1
D32008 to D32009	
D32010 to D32011	PLC Setup settings for port 2
D32018 to D32019	
D32002 to D32007	Not used in protocol macro mode
D32012 to D32017	
D32020 to D32767	Reserved for system use

Serial Communications Unit

Allocated DM area: Use the following areas in words D30000 to D31599.

Unit number	DM area
0	D30000 to D30099
1	D30100 to D30199
2	D30200 to D30299
3	D30300 to D30399
4	D30400 to D30499
5	D30500 to D30599
6	D30600 to D30699
7	D30700 to D30799
8	D30800 to D30899
9	D30900 to D30999
A	D31000 to D31099
B	D31100 to D31199
C	D31200 to D31299
D	D31300 to D31399
E	D31400 to D31499
F	D31500 to D31599

Note The allocation within each DM area is as follows (m=D30000 + 100 × Unit Number):

m to m+1, m+8 to m+9: PLC Setup settings for port 1
m+10 to m+11, m+18 to m+19: PLC Setup settings for port 2
m+2 to m+27, m+212 to m+217: Not used
m+20 to m+99: Not used

Contents of PLC Setup Area

m=D30000 + 100 × Unit Number

DM area				Bit	Contents of setting
Board		Unit			
Port 1	Port 2	Port 1	Port 2		
D32000	D32010	m	m+10	15	Port setting 0:Default, 1:Setting required
				14 to 12	Reserved
				11 to 08	Serial communications mode (6 Hexadecimal: Protocol macro)
				07 to 05	Reserved
				04	Start Bit 0: 1 bit, 1:1 bit (whether it is set to 0 or 1 it will be fixed at 1 bit)
				03	Data length 0: 7 bits, 1: 8 bits
				02	Stop bit 0: 2 bits, 1: 1 bit
				01	Parity 0: with, 1: without
				00	Parity 0: even, 1: odd
D32001	D32011	m+1	m+11	15 to 04	Reserved
				03 to 00	Baud rate (bps) 0: Default (9,600), 3: 1,200, 4: 2,400, 5: 4,800, 6: 9,600, 7: 19,200, 8: 38,400
:	:	:	:	:	:
D32008	D32018	m+8	m+18	15	Transmission mode 0: Half-duplex, 1: Full-duplex **Note**: When using standard system protocol, be sure to set to 0 (half-duplex)
				14 to 00	Reserved
D32009	D32019	m+9	m+19	15 to 00	Maximum number of bytes of send/receive data: 00C8 to 03E8 (Hexadecimal) **Note**: When using standard system protocol, be sure to set to 03E8 Hexadecimal (1,000 bytes)

C200HX/HG/HE

With the C200HX/HG/HE PLC, PLC Setup settings for using a Communications Board in protocol macro mode, are made in the PLC Setup settings of the PSB.

Settings Related to the RS-232C Port

Word number	Bit	Function (initial values: factory-set)
DM 6645	00 to 03	RS-232C port communications conditions settings 00: Standard settings (initial values) Start bit: 1 bit, Data length: 7 bits, Parity: even Stop bit: 2 bits, Baud rate: 9,600bps 1: As set for DM 6646
	04 to 07	CTS control enable/disable settings 0: Without (initial value) 1: With
	08 to 11	Area used for 1:1 link 0: LR00 to 63 (initial value), 1:LR00 to 31, 2: LR00 to 15 Maximum PT number for NT link 1:N connection 1 to 7 (BCD) (for C200HE: 1 to 3)
	12 to 15	RS-232C port mode settings 0: Host link (initial value), 1: No RS-232C procedure, 2: 1:1 link for Slave 3: 1:1 link for Master, 4: NT link (1:1), 5: NT link (1:N)
DM 6646	00 to 07	RS-232C port baud rate setting 00: 1,200 (initial value), 01: 2,400, 02: 4,800, 03: 9,600, 04: 19,200
	08 to 15	RS-232C port frame format settings Start bit / Data length / Stop bit / Parity 00: 1 bit / 7 bits / 1 bit / Even (initial value) 01: 1 bit / 7 bits / 1 bit / Odd 02: 1 bit / 7 bits / 1 bit / Without 03: 1 bit / 7 bits / 2 bits / Even 04: 1 bit / 7 bits / 2 bits / Odd 05: 1 bit / 7 bits / 2 bits / Without 06: 1 bit / 8 bits / 1 bit / Even 07: 1 bit / 8 bits / 1 bit / Odd 08: 1 bit / 8 bits / 1 bit / Without 09: 1 bit / 8 bits / 2 bits / Even 10: 1 bit / 8 bits / 2 bits / Odd 11: 1 bit / 8 bits / 2 bits / Without
DM 6647	00 to 15	RS-232C port send delay time settings 0000 (initial value) to 9999 (BCD, unit: 10ms)
DM 6648	00 to 07	Unit number settings for RS-232C port host link mode 00 (initial value) to 31 (BCD)

Settings Related to Peripheral Port

Word number	Bit	Function (initial values: factory set)
DM 6650	00 to 03	Peripheral port communications conditions standard format settings 00: Standard settings (initial values) Start bit: 1 bit, Data length: 7 bits, Parity: even Stop bit: 2 bits, Baud rate: 9,600bps 1: Set separately
	04 to 11	Reserved for system
	12 to 15	Peripheral port mode settings 0: Host link (initial value), 1: No RS-232C procedure
DM 6651	00 to 07	Peripheral port baud rate settings (bps) 00: 1,200 (initial value), 01: 2,400, 02: 4,800, 03: 9,600, 04: 19,200
	08 to 15	Peripheral port frame format settings Start bit / Data length / Stop bit / Parity 00: 1 bit / 7 bits / 1 bit / Even (initial value) 01: 1 bit / 7 bits / 1 bit / Odd 02: 1 bit / 7 bits / 1 bit / Without 03: 1 bit / 7 bits / 2 bits / Even 04: 1 bit / 7 bits / 2 bits / Odd 05: 1 bit / 7 bits / 2 bits / Without 06: 1 bit / 8 bits / 1 bit / Even 07: 1 bit / 8 bits / 1 bit / Odd 08: 1 bit / 8 bits / 1 bit / Without 09: 1 bit / 8 bits / 2 bits / Even 10: 1 bit / 8 bits / 2 bits / Odd 11: 1 bit / 8 bits / 2 bits / Without
DM 6652	00 to 15	Peripheral port send delay settings (host link): 0000 (initial value) to 9999 (units: 10ms)
DM 6653	00 to 07	Unit number settings for peripheral port host link mode 00 (initial value) to 31 (unit number)

Communications Board Settings

Settings Related to Port B

Word number	Bit	Mode	Function	Note
DM 6550	00 to 03	Host link No procedure Protocol macro	Port B communications conditions standard format settings 0: Standard settings (initial values) Start bit: 1 bit, Data length: 7 bits, Parity: even Stop bit: 2 bits, Baud rate: 9,600bps 01: Set separately → DM 6551: 00 to 15 enabled	
	04 to 07	Host link No procedure 1:1 link	CTS control enable/disable settings 0: Without (initial value) 1: With	
	08 to 11	1:1 link (Master) NT link (1:N)	Port B 1:1 link area 0: LR00 to 63 (initial value), 1:LR00 to 31, 2: LR00 to 15 Maximum PT unit number for port B, NT link 1:N 1 to 7 (BCD) (for C200HE: 1 to 3)	Once a 1:1 link with a Master has been set, it cannot be changed.
	12 to 15	All modes	Port B mode setting 0: Host link (initial value), 1: No RS-232 procedure 2: 1:1 link for Slave, 3: 1:1 link for Master, 4:NT link (1:1), 5: NT link (1:N), 6: Protocol macro	
DM 6551	00 to 07	Host link No procedure Protocol macro	Port B baud rate settings (bps) 00: 1,200 (initial value), 01: 2,400, 02: 4,800, 03: 9,600, 04: 19,200	Only valid when set separately.
	08 to 15	Host link No procedure Protocol macro	Port B frame format settings Start bit / Data length / Stop bit / Parity 00: 1 bit / 7 bits / 1 bit / Even (initial value) 01: 1 bit / 7 bits / 1 bit / Odd 02: 1 bit / 7 bits / 1 bit / Without 03: 1 bit / 7 bits / 2 bits / Even 04: 1 bit / 7 bits / 2 bits / Odd 05: 1 bit / 7 bits / 2 bits / Without 06: 1 bit / 8 bits / 1 bit / Even 07: 1 bit / 8 bits / 1 bit / Odd 08: 1 bit / 8 bits / 1 bit / Without 09: 1 bit / 8 bits / 2 bits / Even 10: 1 bit / 8 bits / 2 bits / Odd 11: 1 bit / 8 bits / 2 bits / Without	

Settings Related to Port A

Word number	Bit	Mode	Function	Note
DM 6555	00 to 03	Host link No procedure Protocol macro	Port A communications conditions standard format settings 0: Standard settings (initial values) Start bit: 1 bit, Data length: 7 bits, Parity: even Stop bit: 2 bits, Baud rate: 9,600bps 01: Set separately → DM 6556: 00 to 15 enabled	
	04 to 07	Host link No procedure 1:1 link	CTS control enable/disable settings 0: Without (initial value) 1: With	
	08 to 11	1:1 link (Master) NT link (1:N)	Port A 1:1 link area 0: LR00 to 63 (initial value), 1:LR00 to 31, 2: LR00 to 15 Maximum PT unit number for port A, NT link 1:N 1 to 7 (BCD) (for C200HE: 1 to 3)	Once 1:1 link with a Master has been set, it cannot be changed.
	12 to 15	All modes	Port A mode setting 0: Host link (initial value), 1: No RS-232 procedure 2: 1:1 link for Slave, 3: 1:1 link for Master, 4:NT link (1:1), 5: NT link (1:N), 6: Protocol macro	
DM 6556	00 to 07	Host link No procedure Protocol macro	Port A baud rate settings (bps) 00: 1,200 (initial value), 01: 2,400, 02: 4,800, 03: 9,600, 04: 19,200	Only valid when set separately.
	08 to 15	Host link No procedure Protocol macro	Port A frame format settings Start bit / Data length / Stop bit / Parity 00: 1 bit / 7 bits / 1 bit / Even (initial value) 01: 1 bit / 7 bits / 1 bit / Odd 02: 1 bit / 7 bits / 1 bit / Without 03: 1 bit / 7 bits / 2 bits / Even 04: 1 bit / 7 bits / 2 bits / Odd 05: 1 bit / 7 bits / 2 bits / Without 06: 1 bit / 8 bits / 1 bit / Even 07: 1 bit / 8 bits / 1 bit / Odd 08: 1 bit / 8 bits / 1 bit / Without 09: 1 bit / 8 bits / 2 bits / Even 10: 1 bit / 8 bits / 2 bits / Odd 11: 1 bit / 8 bits / 2 bits / Without	

Appendix C
Wiring RS-232C Cable Connectors

Cable Processing (End Connected to FG)

See the diagrams for the lengths required in each set.

1,2,3... 1. Cut the cable to the required length.

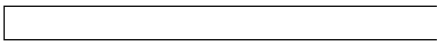

2. Peel the sheath using a razor blade without damaging the shield weaving.

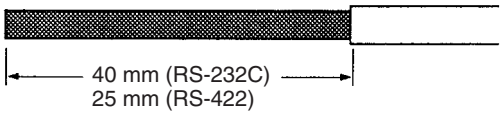

3. Remove the shield using scissors.

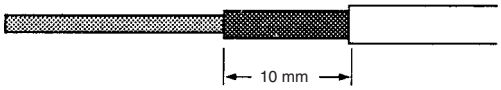

4. Peel the core wire of each wire using a stripper.

5. Fold back the shield wire.

6. Wrap aluminum foil tape on top of the folded shield.

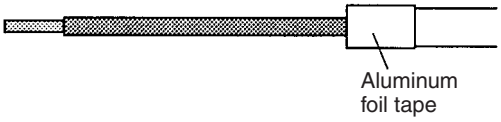

Soldering

Solder as described next.

1,2,3... 1. Place a heat-shrinking tube around each wire.
2. Pre-solder each wire and to its connector pin.
3. Solder each wire firmly in place.

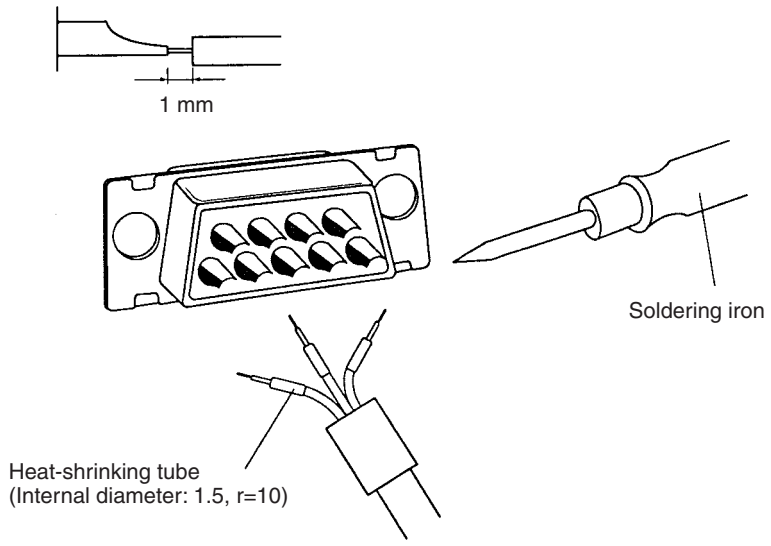

4. Move the heat-shrinking tube to the soldered section and shrink the tube by heating it.

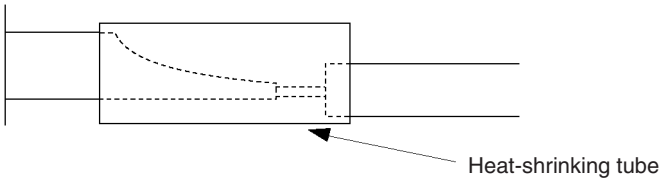

Assembling Hood

Assemble the connector hood as shown below.

CS/CJ

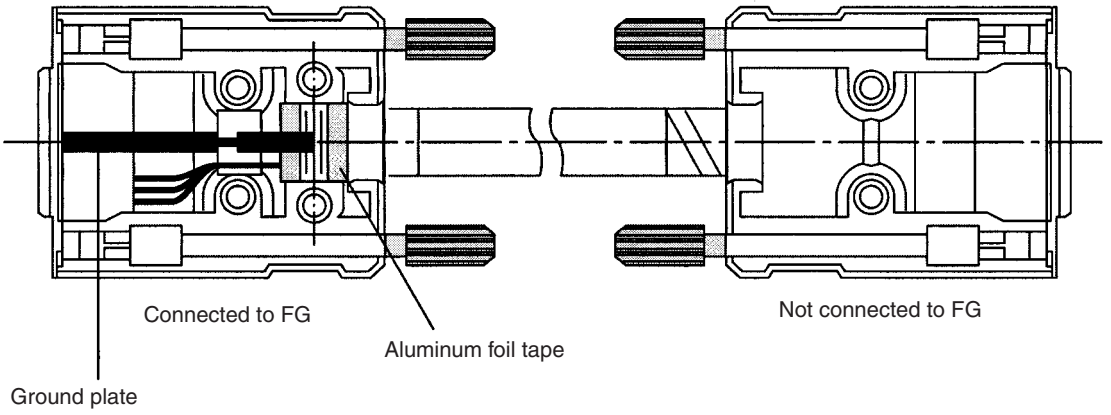

C200HX/HG/HE

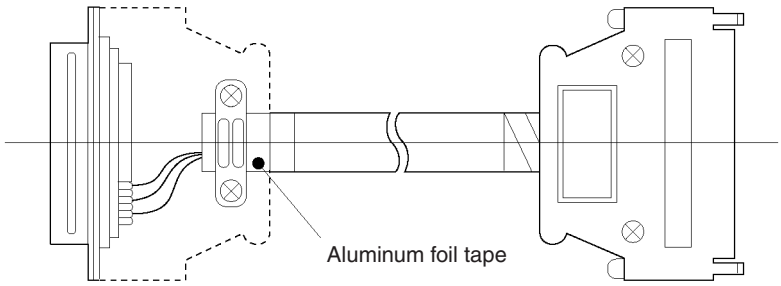

Connected to FG

Not connected to FG

Revision History

A manual revision code appears as a suffix to the catalog number on the front cover of the manual.

Cat. No. W344-E1-19

Revision code

The following table outlines the changes made to the manual during each revision. Page numbers refer to the previous version.

Revision code	Date	Revised content
01	February 1999	Original production
02	April 1999	**Pages xi, 2, 5, 24, 25, 38, 114, 268, 333, 339, and 343:** Minor corrections which include those to the software version, ladder program examples, general wording, etc.
03	September 2001	Information on CJ-series PLCs was added and “CS1” was globally changed to “CS” or “CS/CJ” as applicable. **Pages xi, xii, 2, 5, 6, 33, 38, 42, 46, 47, 48, 54, 109, 207 to 212, 214, 228, 238, 255, 256, 260, 262, 270, 281, 283, 284, 287, 288, 298, 299, and 334:** Minor corrections and additions (including changes to icon graphics).
04	December 2003	PC was changed to PLC throughout the manual, except where it is referring to a personal computer, and information on CS1D PLCs was added. The following changes were also made. **Page xi:** Updated list of manuals. **Page xii:** Updated table. **Page xiv:** Added version upgrade summary. **Page 5:** Updated table of supported PLCs. **Page 7:** Added information on Communications Board for SYSMAC Alpha. **Pages 43, 44:** Added Windows operating systems supported by CX-Protocol. **Page 44:** Added new instructions to procedure **Page 45:** Added information on installing Windows XP. **Page 106:** Added information for CS/CJ-series PLCs and removed Note 2. **Page 107:** Added information on CS/CJ-series PLCs to variable format. **Page 111:** Changed “fourth” to “third” and “third” to “second” in first example in table. **Page 112:** Swapped diagrams in last two rows of table at bottom of page. **Page 116:** Changed “12” to “15” in the second CRC equation. **Page 117:** Changed MSB diagram and “12” to “15” in CRC algorithm. **Page 287:** Added step 5 to procedure.

Revision code	Date	Revised content
05	February 2005	**Page v:** Signal word definitions altered. **Page xi:** Models added, W414 deleted, and W425 changed. **Page xii:** Paragraph and table added at top and three pages added after. **Page xiii:** Version information added. **Page 5:** Version changed in top table, line and “software license agreement” added to second table, models and note added to third table, and model versions updated in fourth table. **Page 6:** Model number version updated in top table. **Pages 8 and 35:** OS, memory, and hard disk drive specifications updated. **Page 10:** Model versions updated in table. **Page 23:** Model numbers and reference manual added at bottom of page. **Page 24:** “Only” deleted. **Page 25:** Note clarified and reference in first step of procedure corrected. **Page 26:** “SECTION 6” added to procedure 5. **Page 28:** Manual name corrected at bottom of page. **Page 29:** References corrected at top and bottom of page. **Page 43:** Section on installation replaced. **Page 47:** Paragraph added after graphic. **Page 60:** Product added to note. **Page 64:** Reference at bottom of graphic added. **Page 75:** “CS1” changed to “CS/CJ.” **Page 84:** Note added. **Pages 97, 271, 273, 274:** “PC” corrected to “PLC.” **Page 129:** Model version updated and graphic text corrected at top of page. **Page 135:** “Operation Manual” added. **Page 168:** Mode version updated at bottom of page. **Page 183:** Manual name corrected and manual added at top of page. **Page 186:** “(Only for CS1W-SCB41)” removed from *Cause* column. **Page 212:** Text added at top of page. **Page 229:** Heading changed at top of page. **Page 248:** Section added. **Page 274:** Removed subnote at bottom of page. **Page 279:** Corrected reference in middle of page. **Pages 280, 283, 287:** Replaced graphic. **Page 285:** Corrected step reference in note at top of page. **Page 286:** Deleted step 11 and added text to new step 11. **Page 356:** Corrected reference at bottom of page.

Revision code	Date	Revised content
06	July 2006	The following changes were made. **Page xi:** *Communications Command Reference Manual* Cat. No. changed and CX-Programmer version updated. **Page xiii:** Table at bottom of page updated. **Page xvii:** Version upgrade information added. **Pages 2, 56, 57, and 60:** Note added. **Page 5:** Version of CX-Protocol updated and PLC models added. **Page 6:** Information added. **Page 9:** Information added at top of page and versions updated in illustration at bottom of page. **Page 10:** Models added. **Page 25:** Versions updated in illustration at top of page. **Page 26:** Section reference added at top of page. **Page 35:** Supported networks and connection with PLCs updated. **Page 40:** Windows versions added and PLC models added. **Page 41:** Illustration added. **Page 60:** Menu item added. **Pages 63 and 64:** Toolbar updated. **Pages 98, 249, 287, and 336:** “/CJ” or “/CP” added. **Page 124:** Information added to note in middle of page. **Pages 192 and 193:** “A” added to “RS-422.” **Pages 226, 299, 306, 307, 308, 347 and 349:** “SYSMAC Alpha” and “α” corrected to “C200HX/HG/HE.” **Pages 280, 282, and 342:** “CX-Net” changed to “CX-Integrator.” **Pages 282 and 301:** Manual reference changed. **Page 303:** Information added after screen shot. **Page 321:** Reference in callout for first screen shot corrected. **Pages 342 to 347:** Error messages added.
07	July 2007	**Pages xi, xiii, and 45:** Updated CX-One version to 2.1. **Page xi and xii:** Added model numbers, changed paragraph at top of page, and added the CP Series and NSJ Series. **Page xix:** Added version upgrade information. **Pages xv and 5:** Added CJ-series CPU Unit model numbers. **Page 5:** Updated CX-Protocol version to 1.71. **Page 9:** Changed description of supported personal computers. **Page 37:** Removed rows from table and added note. **Page 42:** Added model numbers.
08	June 2008	Revision and changes associated with upgrade to CX-Protocol version 1.8.
09	February 2009	Revision and changes associated with upgrade to CX-Protocol version 1.81.
10	October 2009	Revision and changes associated with upgrade to CX-Protocol version 1.9.
11	December 2009	Revision and changes associated with upgrade to CX-Protocol version 1.91.
12	February 2010	Revision and changes associated with upgrade to CX-Protocol version 1.92.
13	July 2011	Revision and changes associated with upgrade to CX-Protocol version 1.93.
14	January 2012	Revision and changes associated with upgrade to CX-Protocol version 1.95.
15	April 2012	Revision and changes associated with upgrade to CX-Protocol version 1.96.
16	April 2016	Supported Windows 10
17	December 2018	Revision and changes associated with upgrade to CX-Protocol version 2.00. (Supported CS1D-CPU68HA,67HA, 67SA and 44SA)
18	June 2022	Corrected mistakes.
19	October 2026	Added upgraded information of CX-One Ver.4.70.

OMRON Corporation **Industrial Automation Company**

Kyoto, JAPAN **Contact : www.ia.omron.com**

Regional Headquarters

OMRON EUROPE B.V.
Wegalaan 67-69, 2132 JD Hoofddorp
The Netherlands
Tel: (31) 2356-81-300 Fax: (31) 2356-81-388

OMRON ELECTRONICS LLC
2895 Greenspoint Parkway, Suite 200
Hoffman Estates, IL 60169 U.S.A.
Tel: (1) 847-843-7900 Fax: (1) 847-843-7787

OMRON ASIA PACIFIC PTE. LTD.
438B Alexandra Road, #08-01/02 Alexandra
Technopark, Singapore 119968
Tel: (65) 6835-3011 Fax: (65) 6835-3011

OMRON (CHINA) CO., LTD.
Room 2211, Bank of China Tower,
200 Yin Cheng Zhong Road,
PuDong New Area, Shanghai, 200120, China
Tel: (86) 21-6023-0333 Fax: (86) 21-5037-2388

Authorized Distributor:

©OMRON Corporation 1999-2026 All Rights Reserved.
In the interest of product improvement,
specifications are subject to change without notice.

Cat. No. W344-E1-19 1026